DOCUMENT RESUME

ED 476 798 SE 067 842

AUTHOR	Miner, Dorothy L., Ed.; Nieman, Ron, Ed.; Swanson, Anne B., Ed.; Woods, Michael, Ed.
TITLE	Teaching Chemistry to Students with Disabilities: A Manual for High Schools, Colleges, and Graduate Programs. 4th Edition.
INSTITUTION	American Chemical Society, Washington, DC.
ISBN	ISBN-0-8412-3817-0
PUB DATE	2001-00-00
NOTE	150p.; Produced by the Committee on Chemists with Disabilities.
AVAILABLE FROM	American Chemical Society, Office of Professional Training, 1155 16th Street, NW, Washington, DC 20036. E-mail: cwd@acs.org.
PUB TYPE	Books (010) -- Guides - Classroom - Teacher (052) -- Reports - Descriptive (141)
EDRS PRICE	EDRS Price MF01/PC07 Plus Postage.
DESCRIPTORS	*Chemistry; *Disabilities; *Equal Education; High Schools; Higher Education; Science Education

ABSTRACT

This book contains a manual for high schools, colleges, and graduate programs focusing on teaching chemistry to students with disabilities. Contents include: (1) "Disability Laws and Services"; (2) "In the Classroom"; (3) "Testing and Evaluation"; (4) "Assistive Technology and Accessible Computing"; (5) "In the Laboratory"; (6) "Mentoring and Advocacy: Ensuring Successful Transitions to Higher Education and Employment"; and (7) "Universal Design: Accessibility for Everyone". (Contains 135 references.) (YDS)

Reproductions supplied by EDRS are the best that can be made
from the original document.

Teaching Chemistry to Students with Disabilities:

A Manual for High Schools, Colleges, and Graduate Programs

4th Edition

ED 476 798

SE 067 842

PERMISSION TO REPRODUCE AND DISSEMINATE THIS MATERIAL HAS BEEN GRANTED BY

T. Hamerloff

TO THE EDUCATIONAL RESOURCES INFORMATION CENTER (ERIC)

U.S. DEPARTMENT OF EDUCATION
Office of Educational Research and Improvement
EDUCATIONAL RESOURCES INFORMATION CENTER (ERIC)

☒ This document has been reproduced as received from the person or organization originating it.

☐ Minor changes have been made to improve reproduction quality.

• Points of view or opinions stated in this document do not necessarily represent official OERI position or policy.

BEST COPY AVAILABLE

Teaching Chemistry to Students with Disabilities: A Manual for High Schools, Colleges, and Graduate Programs 4th Edition

Dorothy L. Miner, Ron Nieman, Anne B. Swanson, and Michael Woods, Editors
Kelley Carpenter, Copy Editor

American Chemical Society Committee on Chemists with Disabilities
Copyright 2001, The American Chemical Society
ISBN 0-8412-3817-0

Statements in this publication are those of the contributors and do not necessarily reflect the views of the American Chemical Society, the National Science Foundation, or the contributors' employers. The use of brand names is informational only and does not imply endorsement of any product.

Table of Contents

Introduction 4

Chapter 1. Disability Laws and Services 10
Rehabilitation Act of 1973 11
Individuals with Disabilities Education Act 12
Americans with Disabilities Act of 1990 14
Institutional and faculty obligations 14
Disability services for students 15
Focus on full participation 16
Faculty responsibilities 17
DSS assistance with accommodations 18

Chapter 2. In the Classroom 21
Presemester planning 21
During the semester 23
Taking notes 25
Students with limited mobility 26
Students who are blind or vision-impaired 26
Students who are deaf or hearing-impaired 31
Students with learning disabilities or ADHD 34
Other disabilities and individual accommodations 42

Chapter 3. Testing and Evaluation 43
Past accommodations as a guide 43
Students with limited mobility 45
Students who are blind or vision-impaired 46
Students who are deaf or hearing-impaired 46
Students with learning disabilities or ADHD 47

Chapter 4. Assistive Technology and Accessible Computing . .48
Benefits of computer technology 48
Students with limited mobility 49
Students who are blind or vision-impaired 53
Students who are deaf or hearing-impaired 55
Students with learning disabilities or ADHD 56

Chapter 5. In the Laboratory 59
General laboratory considerations 59
Architectural modifications 60
Directed laboratory assistants 62
Students with limited mobility 62
Students who are blind or vision-impaired 68
Students who are deaf or hearing-impaired 71
Students with learning disabilities or ADHD 72

Chapter 6. Mentoring and Advocacy: Ensuring Successful Transitions to Higher Education and Employment 73
Proving abilities 73
Mentoring students with disabilities 74
High school 75
Participation, avoiding gaps 76
High school to college 77
Acquiring skills 78
College 79
The DSS office 81
Resolving problems 82
College to graduate school, postdoctoral service, and employment 83
Employment 84

Chapter 7. Universal Design: Accessibility for Everyone 86
Classrooms and laboratories 86
User-friendly emphasis 87
Universal design for the lab 88
On the Internet 89
Why do it? 90
Accessibility guidelines 91
Accessibility needs for specific disabilities 94
Conclusion: A great adventure for all 96

Resources 97
References 139
Credits 146
Disclaimer 147

Introduction

Individuals with physical disabilities often encounter barriers to one of modern society's most important rites of passage. It is that crucial process of obtaining a good education—so natural and uncomplicated for most people—that opens the door to productive employment and full participation in society. Today's barriers are rarely physical or architectural. More often, they involve perceptions and misperceptions of not just *disability* but also *ability*. One misperception is that a physical disability somehow disqualifies a person from a career in science, engineering, or mathematics. Well-intentioned but misinformed adults still discourage students with disabilities from pursuing careers in these fields. Often it occurs indirectly and implicitly, when adults withhold the mentoring and encouragement that can nudge young people toward science careers and sustain their interest. In addition, adults may set artificial limits on what the student with disabilities should attempt. These limits may be based not on reality but on the adults' own low expectations for the student or sincere concerns that the student may fail and not cope well with failure. In reality, students with disabilities benefit from the freedom to establish their own horizons (1), cope very well with the process, and learn from it.

Study after study verifies the result of this lack of encouragement. Despite many advances and individual success stories, people with physical disabilities are underrepresented in science careers. They constitute about 10.4% of the overall workforce but only 2.7% of the science and engineering workforce, according to U.S. Census figures. This disparity does not reflect a lack of interest in science. A study by the American Council on Education (ACE), for example, revealed that college freshmen with disabilities express just as much interest in pursuing a science major as their peers (2). This interest, unfortunately, seldom translates into a career in science. The loss of this talent in the sciences is substantial. ACE found that about 9.4% of all 1998 college freshmen—more than 150,000 students—reported a disability (2). Yet, National Science Foundation (NSF) data suggest that fewer than 320 individuals with disabilities received doctorates in science or engineering in 1997 (3) (7% of all 1988 freshmen reported a disability). Overall, individuals with disabilities remain the most underemployed and unemployed group in society.

The American Chemical Society (ACS) has pioneered efforts to remove barriers that hamper individuals with disabilities from studying chemistry and starting careers in science. ACS, the world's largest scientific organization, focuses its efforts through its Committee on Chemists with Disabilities (CWD). The commit-

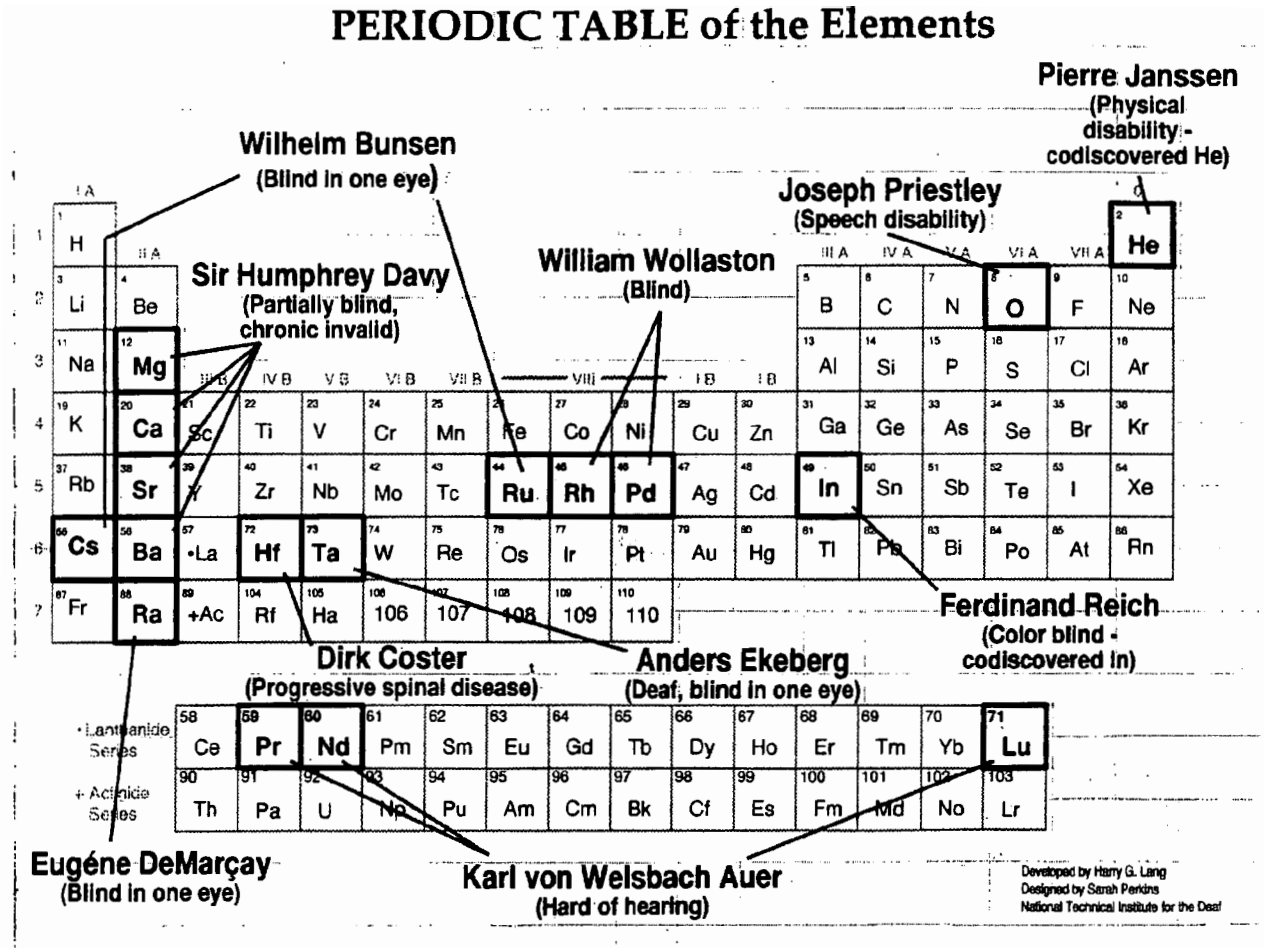

tee's projects include three previous editions of this book, which were entitled *Teaching Chemistry to Students with Disabilities.* This fourth edition, renamed *Teaching Chemistry to Students with Disabilities: A Manual for High Schools, Colleges, and Graduate Programs,* shares a similar concern and commitment. A companion publication, *Working Chemists with Disabilities* (4), describes how scientists maintain productive careers in research, teaching, and other fields despite physical disabilities. NSF generously funded work on *Teaching Chemistry.*

Practical information for classroom and lab

Teaching Chemistry is a resource book for teachers at the high school, college, and postgraduate levels; students with disabilities; parents; counselors; and professional staff in college Disability Services for Students (DSS) Offices. Since publication of the initial edition in 1981, *Teaching Chemistry* has become a standard reference on the topic. ACS has distributed thousands of copies of the first three editions of *Teaching Chemistry* without charge in the United States and other countries. *Teaching Chemistry* is widely recognized as a source of practical information about how to promote full participation of students with disabilities in the classroom

BEST COPY AVAILABLE

and laboratory. Prepared by scientists who themselves have excelled in chemistry despite physical disabilities and experts on disability issues, the book is noted for its sensitivity to the underlying desires of almost every student with a physical disability. One of these is to be judged by one's performance and academic achievement and not by one's disability. Another is to make their own decisions on what challenges to undertake. Yet another is to play a major role in selecting the approaches and accommodations needed to meet challenges.

Students with disabilities have individual needs, just like their able-bodied classmates. Those needs depend on the specific disability. All students, however, learn best when teachers address individual needs. *Teaching Chemistry* provides information about a variety of successful classroom and laboratory accommodations for students with disabilities. In many instances, the accommodations are simple, inexpensive, and require little significant change in instructional approach or additional effort from the instructor.

It's the right thing to do

Why should an instructor exert that extra effort, no matter how small? There are two compelling reasons.

Instructors should provide accommodations because it is the right thing to do, and *Teaching Chemistry* embraces this as its central theme. Society cannot afford to limit science careers to certain groups in the population: only people with perfect eyesight or hearing, the strong, the fleet of foot. Rarely, if ever, is great physical prowess a prerequisite for a successful career in science. That makes science, engineering, and mathematics ideal career options for individuals with disabilities. Excluding people from science on the basis of physical attributes would be a terrible waste of human talent and diversity.

A diverse scientific workforce is increasingly recognized as essential to ensure our country's competitiveness in the high-tech global marketplace (3). Indeed, diversity has become an axiom in some sectors of the economy, including the global biopharmaceutical industry. Companies have recognized the value of including individuals with different approaches to solving problems, life experiences, and backgrounds on multidisciplinary research teams. Many research problems can be solved most effectively when approached from multiple perspectives, and scientists who have disabilities bring unique perspectives to those teams. They also bring attributes such as persistence and creativity finely honed by years of developing innovative ways of excelling in academic and other pursuits despite physical disabilities.

The success of scientists with disabilities attests to the value of

being inclusive. They have been participants in the remarkable progress of science in the 20th century, particularly chemistry (5). For example, Sir John W. Cornforth, the Australian organic chemist who shared the 1975 Nobel Prize in Chemistry for research on the stereochemistry of enzyme-catalyzed reactions, is deaf. The renowned American organic chemist Henry Gilman was blind for a large portion of his career. These are just a few examples of individuals with disabilities who have made valuable scientific contributions in research, education, government, and industry (6) (see table). Those interested in learning more should read *Working Chemists with Disabilities* (4), which demonstrates in compelling fashion that science is a viable and rewarding career choice for students with disabilities.

Instructors should also bear in mind that being able-bodied can be the most fleeting of human conditions. Accidents or illnesses can bring on physical disability in an instant. In addition, the inexorable advance of time makes us all increasingly less able-bodied and more in need of accommodations to remain productive in our careers.

It's the law

In sections on the legal protections for individuals with disabilities, *Teaching Chemistry* details a second and more pragmatic reason for accommodating students with disabilities: It is the law. Schools that fail to provide reasonable accommodations are liable to formal complaints and lawsuits, with all the attendant expense, negative publicity, and potential damage to hard-won reputations. Legal action is quite rare because issues involving accommodations usually can be resolved simply and equitably when approached in a collegial fashion.

Fortunately, the basic requirements for teaching chemistry to students with disabilities are simple: capable teachers and motivated students. Many accommodations for students with disabilities likewise are simple, inexpensive, and require relatively little extra effort. Teachers may be surprised at the extent to which accommodations made for students with disabilities also are welcomed by nondisabled students and can improve the education of every member of the class and laboratory. Attention to individual needs can ensure that students with disabilities participate fully in laboratory, as well as classroom, learning experiences.

The ACS Committee on Professional Training has joined CWD in stating that a physical disability should never exclude a student from an educational activity as important as laboratory work. Given the appropriate accommodations, a student with a disability can experience and learn from all aspects of a laboratory exercise.

Some students with limited mobility, restricted dexterity, or vision disabilities may need a lab assistant who will set up and perform physical manipulations of experiments under the student's direction. Withholding the appropriate accommodations essential for the student's laboratory experience can be very detrimental.

Inclusion vs. full participation

For these reasons, students with disabilities should be "included" in the chemistry classroom and laboratory. Inclusion has been their overriding goal for decades. Instructors, however, should strive—to the greatest extent possible—for an objective that goes beyond inclusion. Inclusion to many individuals with disabilities now means being allowed in the classroom or lab section. Just being there is not enough. Students must be in an environment that permits full access to the educational experience available to their able-bodied classmates. The 21st century goal is not just "inclusion" but "full participation." Full participation can be achieved through that "magic triangle" in which the instructor, the student with disabilities, and the professional staff in the college DSS office or its K–12 counterpart work together.

Accommodations should not be reserved only for high school students headed for a college major in science or the college student majoring in chemistry. All citizens in a modern technological society need basic knowledge of chemistry and the rest of science, to make informed decisions and participate in local and national debates. Scientifically literate citizens are better equipped to make decisions, including those involving the funding of scientific research. Likewise, the accommodations necessary to experience chemistry in the classroom and laboratory should be extended to all students with disabilities, including those who plan to take only one chemistry course. Chemistry is a central science, and the study of chemistry is a gateway to a whole range of careers in the sciences and health professions. Non-accommodation in chemistry classes would foreclose a large range of career options to people with disabilities.

Strategies, methods, resources

Teaching Chemistry provides an overview of instructional strategies, methods, and resources. It includes sections on legal rights of students with disabilities, responsibilities of their teachers and institutions, advice on obtaining needed resources, teaching strategies for classroom and laboratory, techniques for testing and evaluation, tips on incorporating assistive technology, ideas for improving laboratory access for everyone through universal design, and much more. Chemistry education does not end at the classroom or

laboratory door. *Teaching Chemistry* thus includes information on internships, which provide critical real-world work experience for students with disabilities; tips on preparing for job interviews; mentoring and advocacy advice; and other resources for helping students successfully undertake that rite of passage from school to a productive career.

This book is not intended to be comprehensive. Rather, it should serve as a primer for everyone on the K–12, undergraduate, and graduate levels who is involved with the education of students with disabilities. *Teaching Chemistry* is a starting point for locating more in-depth information and further resources. It includes descriptions of organizations, web addresses, and other information, which will be regularly updated on the Internet version (7).

Chapter 1.
DISABILITY LAWS AND SERVICES

Many individuals with disabilities have built successful science careers in industry, education, government, and other settings (6). Nevertheless, young people with disabilities traditionally have not enjoyed full access to the education needed for careers of their choice. The problem stemmed in part from a lack of physical access to school buildings and facilities. In addition, most students with disabilities had not even been exposed to the sciences, including chemistry and the many fields that involve chemistry, until recently (8, 9). Society's expectations of persons with disabilities were much lower only a generation or two ago. Some parents and educators may have lingering misconceptions about the abilities of people with disabilities to compete and achieve in the sciences. Individuals involved in the education of students with disabilities should strive to educate colleagues and others, helping to remove attitudinal barriers.

About 10% of the students in grades K–12 have an identifiable disability (3, 10). Although students with disabilities are underrepresented at the college level, college chemistry faculty can expect to teach more students with disabilities than ever before. Many will be nonchemistry majors taking a single introductory course. The largest numbers will be in high school and in nonchemistry majors. Nevertheless, an increasing number of students may seek associate, baccalaureate, and advanced degrees in chemistry and related fields that require some study of chemistry. More students with disabilities also are participating in high school chemistry, partly because of laws that require education of most individuals in regular classroom settings.

The U.S. Congress has established a comprehensive legal framework for preventing discrimination against individuals with disabilities and ensuring their full participation in society. Several of these laws apply to educational institutions and make the full range of educational opportunities accessible to persons with disabilities. They include the Rehabilitation Act of 1973; the Education for All Handicapped Children Act of 1975 (now called the Individuals with Disabilities Education Act, or IDEA); the 1997 amendments to IDEA (termed IDEA 1997); and the Americans with Disabilities Act of 1990 (ADA). These laws define the responsibilities of educators to students with disabilities and the overall process by which students are ensured accommodation and access to educational resources. Grades K–12 are addressed primarily in the Rehabilitation Act of 1973 and IDEA 1997. College-level education is addressed mainly in the Rehabilitation Act of 1973 and the ADA.

BEST COPY AVAILABLE

What is a disability?
A disability is a physical or mental impairment that substantially limits an individual in performing one or more "major life activities." These include everyday activities such as caring for oneself, performing manual tasks, walking, seeing, hearing, speaking, breathing, learning, and working. Legally, a person is disabled if he or she has a disability, has a record of the disability, or is regarded as having the disability. Under the ADA and Section 504 of the Rehabilitation Act of 1973, individuals with disabilities are guaranteed certain protections and rights for equal access to programs and services.

The provisions of these laws, like those of any other, are subject to change. For instance, court decisions may significantly alter the rights and responsibilities of both students and educational institutions. Legislative bodies may amend their original legislation. Government agencies may issue new regulations that change the specific ways in which laws must be implemented.

Rehabilitation Act of 1973

Section 504 of the Rehabilitation Act of 1973 applies to institutions, including public and private schools that receive federal funds. It covers students with disabilities in postsecondary education and K–12 students who are not covered under IDEA (described in the next section). A single excerpt from this equal rights law for individuals with disabilities makes its intent clear:

No otherwise qualified handicapped individual . . . shall, solely by reason of his handicap, be excluded from the participation in, be denied the benefits of, or be subjected to discrimination under any program or activity receiving federal financial assistance.

Under the law, schools cannot discriminate in the recruitment, admission, or treatment of students with documented disabilities; limit the number of students with disabilities admitted; make preadmission inquiries as to whether or not an applicant is disabled; or use admissions tests or criteria that inadequately measure the academic qualifications of students with disabilities because special provisions were not made. Among other provisions, the law prohibits schools from excluding a qualified student with a disability from any course of study.

Students with disabilities may request modifications, accommodations, or auxiliary aids to participate in and benefit from all postsecondary educational programs and activities. To the greatest extent possible, institutions must make those changes to ensure that students with disabilities have access to an education. "Access" includes both physical facilities and programs. Schools must make accommodations to remove both physical and programmatic barriers to students with disabilities. Assistive technology in the classroom, for instance, may be needed to ensure that students who are

blind or deaf can learn from lectures on a par with their nondisabled peers. Ramps, automatic doors, elevators, or other architectural modifications may be needed to ensure wheelchair riders access to buildings and upper-floor classrooms. Modifications alone are not sufficient. They must be properly maintained and kept in good working order.

Section 508 requires that electronic and information technology developed, purchased, maintained, or used by federal government agencies be accessible to individuals with disabilities. That includes federal employees and members of the general public. Section 508 was a 1986 amendment to the Rehabilitation Act, but regulations enforcing its provisions went into effect only in mid-2001. Some of its most far-reaching effects involve Internet sites. Information on government web pages must be accessible to individuals with a range of disabilities, including vision and hearing impairments and limited hand and arm mobility. Section 508 included federal agencies in web-accessibility efforts that had been in progress for several years (see Chapter 7).

Individuals with Disabilities Education Act

The IDEA of 1975 provided federal assistance to states for educational services for individuals with disabilities up to age 22 or high school graduation. The law guaranteed full access to educational opportunity for all students with disabilities. IDEA 1997 gave local schools several responsibilities. First, they must determine whether the student has a disability. Second, they must determine the student's educational needs. Third, they must develop an Individualized Education Program (IEP) for students with disabilities in grades K–12. IDEA 1997 also directed that children with disabilities be educated with their nondisabled peers. In general, this provision precludes assigning students with disabilities to "special education" classes, separate schooling, or other removal from the regular education environment. Such exclusion can occur only when the nature or severity of the disability is such that education in regular classes with the use of supplementary aids and services cannot be achieved satisfactorily (11–13).

There is ample evidence to indicate that laboratory experiences enhance science learning. Therefore, laboratory participation is essential in providing students with disabilities an equal opportunity to learn. Science facilities must be accessible and usable for individuals with disabilities in daily use and for evaluating students' performance. Schools may be required to acquire or modify equipment or devices, make appropriate adjustment or modifications of examinations, provide qualified readers or interpreters, and modify teaching materials and classroom policies for students with

WHAT is an IEP?

The IDEA amendments of 1997 require an Individualized Education Program (IEP) for children with disabilities in grades K–12. An IEP is a written plan for facilitating the student's education. Many schools had used IEPs in the past; IDEA-97 made them mandatory. IEPs are a central part of IDEA's goal of improving the education of children with disabilities who are younger than 22. IDEA also required that students with disabilities generally be educated with their nondisabled peers in regular classrooms (15).

IDEA mandated establishment of an IEP team for students who need special education and related services. In general, an IEP is required for all children in special education. An IEP, however, is not always required for students who can fully participate in a normal classroom setting without additional accommodations.

An IEP consists of a written statement for each child, which is developed by the IEP team and reviewed and revised at least once a year.

The IEP must include

- the child's present level of educational performance;
- annual measurable goals and objectives;
- recommended special education and related services;
- a description of the least restrictive environment and the plan for participation in the regular curriculum with nondisabled peers;
- dates, frequency, location, and duration of services;
- assessment methods;
- a transition plan for those older than 14; and
- process monitors and parent reporting procedures (11).

An IEP team should include

- the parents of the child with a disability;
- at least one regular-education teacher (if the child is, or may be, participating in regular education);
- at least one special education teacher or, if appropriate, at least one special education provider for the child;
- a representative of the local education agency who meets certain specified requirements, such as the ability to represent the agency and local school authority to justify the team recommendations and maintain compliance with the law;
- an individual who can interpret the instructional implications of evaluation results;
- at the discretion of the parents or agency, other individuals who have knowledge or special expertise regarding the child, including related services personnel (such as an itinerant specialist); and whenever appropriate, the student (11).

Most state and local agencies make the special educator on the IEP team responsible for implementing the IEP. The regular educator is required to assume an active role in educating students with special needs. Legislation lacks specific recommendations on how schools should provide the teacher in-service training and time necessary to accomplish successful collaboration in the regular classroom (12, 13).

The regular education teacher's role in these meetings is clearly required and defined. He or she is a member of the IEP team and must, to the extent appropriate, participate in the development of the IEP for the child. These responsibilities include determining appropriate positive behavioral intervention strategies and supplemental aids and services, program modifications, and support for school personnel (11).

In addition to or instead of an IEP, some students may have a "504 plan," which describes accommodations that are not of an instructional nature. For example, a student with mobility impairment may be allowed to leave all classes 2 minutes early, to avoid congested hallways and arrive at the next class on time. A student with ADHD may have a plan that describes help with organizational skills that will ensure that homework will be brought to class.

disabilities. As covered in more depth in the following sections, accommodations may include accessible classrooms and laboratories, special testing situations, assistants or interpreters, special adaptive equipment, and multimodal teaching strategies.

Americans with Disabilities Act of 1990

The ADA of 1990, which became effective in 1992, covers employment, state and local government programs and activities, public accommodations and commercial facilities, and telecommunications. The Public Accommodations section extended accessibility requirements to private schools (as well as most public meeting places, libraries, restaurants, museums, and public mass transportation systems). The law also provided private schools with tax incentives for reducing architectural barriers and making facilities fully accessible to students with disabilities.

The U.S. Department of Education's Office of Civil Rights (OCR) and the ADA recognize that students with disabilities may need to seek outside redress when reasonable accommodations are not provided. Students can file complaints with the OCR. They can file lawsuits under the ADA for financial reimbursement if reasonable accommodations are not provided. As noted elsewhere in this book, most disagreements over accommodations can be resolved when the student, teacher, and DSS office work together in a collegial manner. Legal action is rarely needed when this spirit of cooperation exists.

Some states recognize the obligation to make all hardware and software used in higher education accessible for students with disabilities. Consult your state guidelines for implementation of Section 508 and the ADA.

Among the sources for keeping current with the changing legal and regulatory environment is the U.S. Department of Justice Guide to Disability Rights Laws web site (14). It includes downloadable technical assistance manuals and a great deal of other information. Regular updates of the web version of this book will be another useful source.

Institutional and faculty obligations

Institutions and faculty have distinct responsibilities under the ADA and Section 504. Institutions must appoint an ADA 504 compliance officer; self-evaluate their campuses for physical and program accessibility; develop a transition plan for accessibility whenever necessary; and provide assurance that they comply with the laws and offer access to all programmatic areas (e.g., academic, administrative, business, employment), including institutionally supported events and activities. In addition, they must institute methods, poli-

cies, procedures. services, and programs to ensure provision of appropriate accommodations for students, faculty, and staff with disabilities: provide training and resources for faculty and staff regarding provisions; and establish grievance procedures.

Faculty and staff as individuals have a legal responsibility to ensure that each course is accessible. They must ensure nondiscrimination by creating equal access for qualified students with disabilities through the provision of reasonable and appropriate accommodations. Accessibility is essential and should be in the forefront of course and technological planning.

Disability services for students

Postsecondary institutions have staff who are knowledgeable about these responsibilities and laws and assure that the institution meets its obligations to students with disabilities. They can be valuable resources for students with disabilities and their instructors. Some campuses have a specific disability compliance support program, which may be called Disability Support Services for Students, Disabled Student Services, Disability Resource Center, or some similar title. It may be part of another office, such as Student Affairs. All campuses must at least have an ADA compliance coordinator. For simplicity, this book will refer to this resource as the DSS office. A DSS office has overall responsibility to verify student eligibility for disability accommodations; work with students in recommending accommodations; and provide certain accommodations, such as interpreters for students who are deaf and recorded textbooks for students who are blind. The DSS office provides students with a uniform way to request disability services and accommodations without divulging personal medical information to faculty. Students requesting accommodations, however, must document existence of a qualifying disability (see sidebar) to the DSS office. The documentation establishes eligibility for accommodations and services.

At the high school level, schools have designated IEP teams, which develop a written and periodically updated plan for the education of each student with a disability. IEPs are discussed in the accompanying sidebar and elsewhere in this book.

The DSS staff assists students and faculty in the disability accommodation process. It ensures that accommodation recommendations are effective for the student while being reasonable for the institution and faculty. Some DSS offices may have detailed suggestion sheets available on accommodations and teaching strategies for students with various disabilities. An accommodation should not compromise an institution's academic standards or the content of a specific course. It is important to remember that the

What is the DSS office?

The Disability Services for Students Office works with students and faculty to provide accommodations such as transcribers, signers, Braille texts, transportation, and alternative testing situations needed by students. It is an important resource for helping faculty meet their obligations to students with disabilities.

DSS offices can provide the following services, or referrals for these services, for students with disabilities:

- academic and career advising;
- campus and community referrals;
- individualized recommendations regarding appropriate accommodations;
- registration and advisement referrals, early (priority) preregistration;
- on-campus parking privileges;
- adaptive technology centers;
- audio books and e-texts, in coordination with DSS offices and services such as Recordings for the Blind and Dyslexic (16) and NLBPH (17), and the Texas Text Exchange;
- in-class note-taking programs;
- nonstandard academic testing accommodations;
- specialized equipment for specific disabilities, such as assistive listening devices;
- interpreting, including American Sign Language or oral interpreting services;
- real-time captioning and C-print;
- access to a text-based telephone or TTY (see Chapter 4), in the past referred to as TDD (Telecommunications Device for the Deaf);
- educational materials and lab equipment adaptations;
- alternative print formats, such as Braille, large print, computer-based files, and taped text;
- tactile visual aids, such as raised line charts and graphs (18);
- on-campus accessible transportation; and
- information dissemination to teaching and lab assistants: Often the faculty member is notified about the student and his or her accommodations but neglects to inform the lab and teaching assistants or other faculty and staff who will interact with the student.

Both faculty and students should develop rapport with DSS staff and use the DSS office as a resource for answering questions, clarifying issues, and assisting with accommodations.

laws that protect the rights of individuals with disabilities also protect the standards of the institutions being attended. Having a disability does not preclude a student from meeting the essential course requirements or from following the established policies and procedures of the institution.

Focus on full participation

The most important goal for the student with a disability is to participate in the course as fully as possible. In chemistry, that means having an educational experience equal to that of other students. Advances in assistive technology continue to expand educational and professional opportunities for individuals with disabilities. The educator's responsibility is to teach students effectively and provide appropriate accommodations. The student's responsibility is to

capitalize on his or her own capabilities, using accommodations to maximize the learning experience. Ultimately, the responsibility for learning class material rests with the student. The purpose of accommodations is to provide equity of access and a level playing field for each student, regardless of his or her disability.

The DSS office provides other support services for students. The specifics vary from school to school. For example, the DSS staff often provide campus and community training; participate on campus, community, state, and national committees; and provide students with advocacy training. Many students with disabilities receive financial assistance from their state Department of Vocational Rehabilitation Services (DVR). DSS counselors often work with students and DVR staff to arrange accommodations and other support services that may be funded through DVR. The typical DSS office does not directly provide all support services for students with disabilities. The DSS staff, however, are generally very knowledgeable about campus, community, and national support programs. Counselors usually can assist students in obtaining almost any needed service from these and other sources.

The most successful outcomes usually occur with an approach that has been termed the "magic triangle." It involves faculty working closely with the student and the DSS office. This interaction usually results in selection of the most appropriate accommodations for each individual student. In each instance, there may be several effective alternatives for accommodations that fall within the definition of "reasonable and appropriate." All three parties can play an important role in selecting the right accommodation.

Faculty responsibilities

The phrase "Teachers must provide accommodations..." can cause concern among faculty, especially those teaching their first students with disabilities. For example, teachers may mistakenly think that they personally must obtain assistive devices and provide them for the student. Instructors have the personal responsibility for providing some accommodations that make course content accessible to the student, such as advance copies of written instructional material that can be converted into alternative formats. In most instances, however, "provide" means that the instructor must permit or make possible use of assistive devices and other accommodations provided by the student, the DSS office, or an outside agency.

In addition, it is very important for faculty to clearly define the essential requirements for each course and make the information available to students and the DSS office in advance. What textbooks will be used? What supplemental reading will be assigned to the class? What are the dates for tests? Providing this information

ahead of time will give the DSS staff adequate time to work on accommodations.

Faculty should meet requested deadlines for getting course reading materials to the DSS office, to ensure that personnel have adequate time to convert those materials into alternative formats whenever necessary. It may take weeks, for instance, for DSS staff to obtain recorded or Braille versions of course reading materials.

The DSS office makes recommendations for accommodations on the basis of the disability documentation provided by the student. The student then conveys the recommendations in a letter to the instructor. Teachers should know that students usually self-identify as having disabilities because they will require an accommodation. Not all students with disabilities are at ease with this process. Listen carefully to what they say. Ask questions about how the disability will impact classroom or laboratory performance and the accommodations the student may be requesting. Avoid intrusive questions, and respect the student's right to privacy and confidentiality.

Priority course preregistration is an essential accommodation for some students with disabilities. Early registration ensures that instructional materials and any necessary assistive technology are available for the first day of class. In addition, early registration gives students with disabilities access to a course schedule that provides ample time for traveling to the next class. It is also important to allow adequate time for course planning before the semester begins.

In addition, the instructor should prepare for possibilities like the evacuation of students with mobility and vision disabilities from the building during emergencies. DSS services, teachers, and counselors can help by informing the instructor in advance when students with disabilities will be in a class.

DSS assistance with accommodations

DSS offices have resources to assist the teacher in providing many accommodations, such as converting written course materials into Braille, enlarged print, recordings, or digital files. However, it is essential that teachers give DSS personnel adequate lead time. In some cases, alternative formatting may take 10–16 weeks. Interpreters should also be given copies of all printed materials in advance. Audiovisuals, such as slides and overheads, should be copied and given to students who are deaf or hearing-impaired prior to the class. If course materials include videotapes, it is important to ascertain whether the videos are closed-captioned and whether the appropriate decoding equipment is available. The wide use of word processing programs and other software has greatly simplified this process for teachers, who routinely prepare class-

Working with the DSS office

Students and faculty have distinct responsibilities in working with the DSS office. Students with disabilities and faculty must allow adequate time for DSS offices to process requests for accommodations. Teachers have a legal responsibility to ensure that appropriate alternative formats of in-class materials are available to qualified students with disabilities at the same time as their peers. These include reading lists, the course syllabus, handouts, overheads, and videotapes. Faculty themselves need not convert written material into an alternative format. But teachers must provide written course materials (including titles of textbooks) to the student or the DSS office. Typically, this information should be provided by the end of each preregistration period.

Student responsibilities

- Students with disabilities who seek accommodations should identify themselves as needing disability accommodations.
- Students with disabilities should register with the DSS office in order to have their requests for disability accommodations verified.
- If possible, students with disabilities should preregister at the earliest opportunity to be sure their class schedule meets logistic requirements, such as allowing enough time to travel between classes or to schedule interpreters or laboratory assistants.
- Students with disabilities should provide requested documentation of their disability.
- Students with disabilities should participate in developing recommendations for their accommodations.

Faculty responsibilities

- Refer students to the DSS office. Ask students who have self-identified as having disabilities about their the DSS office registration status. Students requesting disability accommodations who are not already working with the DSS office must be informed about and referred directly to the DSS office to establish their eligibility for disability accommodations.
- Understand student self-disclosure. Students requesting accommodations are only required to provide a letter from their DSS program coordinator stating that they have a documented disability on file at the DSS office. Students are not required to divulge the nature of their disabilities or provide faculty and staff with copies of their disability documentation. The student is not obligated to share medical information with the teacher or otherwise additionally justify the DSS-approved request for accommodation.
- Honor student confidentiality. Disability information is confidential and should not be mentioned in front of classmates or other individuals, without the explicit permission of the student. That includes other students whom a professor might ask to serve as a note taker or a lab partner for the student who has requested such accommodations. When disclosing their disabilities, students expect that confidentiality will be maintained.
- Apply consistent standards. Students' requests to the DSS office for accommodations after the fact (such as retaking an exam with accommodations after having failed the exam) should be handled with the same standards applied to all students. If exceptions are not permitted for other students, they should not be permitted for students with disabilities.
- Define course requirements. Clearly define the essential elements of each course, including learning objectives, reading lists, written assignments, and projects. If the essential course elements are not clearly defined, inconsistencies in standards may occur that could cause misunderstandings or even litigation.
- One responsibility of faculty cannot be overemphasized: Ensure that DSS personnel have adequate time to complete arrangements for alternative formatting and other required accommodations. In many instances, DSS offices do not perform the actual alternative formatting themselves. Instead, they hire contractors to perform these services, a process that takes time.

room and lab materials in computer files. With handouts and overheads in digital format, teachers already are prepared to respond to accommodation requests for alternative formatting with an e-mail attachment to the DSS office. DSS personnel can assist with this process as well.

Although some disabilities are apparent, such as using a wheelchair or a dog guide, many are not readily visible. Some students may be reluctant to disclose disabilities or ask for accommodations. The most effective instructors provide all students with a list of resources for the course, including the availability of services through the DSS office. Many instructors, for example, include on each course syllabus wording to the effect: "If you think you may need accommodation due to a disability, please contact the campus Disability Services Office as soon as possible, or the instructor. Instructors at this university make every effort to accommodate students with disabilities, and many services are available through the DSS office."

Teachers sometimes may suspect that a student's poor academic performance is due to an invisible disability. In such cases, the teacher may discuss the situation with the student in private, as would be done with any other student having academic difficulty. Discuss factors that may be affecting the student's progress. A student might disclose a disability-related difficulty at this time or describe problems that suggest a possible disability. In such cases, college teachers should refer the student to the DSS office for information about accommodations or procedures to verify the existence of a disability. K–12 teachers should follow their school's established procedures for conferencing with parents and counselors.

It is imperative that students in high school or college be personally involved in discussing any accommodations for their disabilities. Unfortunately, some teachers may still bypass the student and the DSS office and consult only other teachers or advisers. This can lead to frustrating situations. One practicing research chemist who has a disability recalled his experiences with such situations: "I was constantly frustrated in my attempts to arrange presemester conferences by teachers who said that they had 'already spoken to so-and-so and everything was arranged.' This left me completely in the dark about what had been arranged and unable to express my views on what needed to be arranged." The best outcomes usually occur when faculty work closely with the student with a disability and with the DSS office.

Chapter 2
IN THE CLASSROOM

Students with disabilities have three kinds of classroom needs: those common to all students, those that call for extra consideration in lecturing methods and classroom discussions, and those that require specific individual accommodations. Instructors usually can meet the first two needs simply by following recognized effective teaching practices. Meeting the third category of needs—specific individual accommodations—calls on the teacher's flexibility, creativity, and initiative. Please refer to Chapter 5 for additional relevant information.

Implementing accommodations is smoother when both teacher and student draw on existing knowledge and resources. In their precollege years, for instance, students with disabilities usually have a written plan, called an Individualized Education Program (IEP), which may provide the student with general guidance on postsecondary accommodations that might be needed. An IEP describes the accommodations that best address the student's learning needs at the K–12 level. College and university instructors can draw on advice and other resources from the campus Disability Services for Students (DSS) Office. The DSS office usually verifies eligibility of college students with disabilities who request accommodations and outlines specific accommodations in a letter to the instructor. This chapter discusses common needs of students with disabilities.

Presemester planning

Many accommodations implemented on college campuses for students with disabilities are utilitarian. They address the needs of students with a variety of physical disabilities, as well as able-bodied students, faculty, staff, and visitors. These include ramp access to buildings, automatic doors, and elevator access to upper-floor classrooms and laboratories. These accommodations can be very helpful for older faculty and visitors experiencing the decline in mobility and sensory acuity that inevitably comes with advancing age. Classroom accommodations for students with disabilities also can be utilitarian, making it easier for able-bodied students to hear and see lecture presentations, take notes, and learn.

In general, students with disabilities should position themselves in the most suitable location in each classroom. That usually is a location with a clear view of the instructor and visual aids like overhead projectors and TV monitors. Accommodations, however, should be individually tailored for students with disabilities. The students themselves often are the best source of information about

BEST COPY AVAILABLE

their needs because of their past experience. They know what works best. Ideally, the student with disabilities will initiate a preterm meeting with the instructor to discuss his or her disability and how to implement necessary accommodations. At the very least, the instructor and student should meet to formulate a plan for the semester during the first few days of the term. The instructor also can consult with the DSS office about requested accommodations. Formulating a plan before the semester begins familiarizes the teacher and student with each other's requirements so they can make any necessary arrangements.

Any class may include students who have difficulty speaking or asking questions in public. These difficulties may be compounded for students with disabilities. For example, students who are deaf or hearing-impaired may hesitate to speak in class if some people have misunderstood their speech in the past. They may also be concerned about understanding the teacher's reply or interrupting other speakers whom they do not hear. Similarly, students with language-based learning disabilities may have difficulty translating thoughts into words. These students may become socially isolated from the rest of the class members who may be unaware of their coping methods. Teachers can help by involving students with disabilities in classroom activities as much as appropriate. Encouraging all students to participate actively in class is an effective teaching technique that benefits all students. It can have particular benefit for students with disabilities.

In the same way, teachers can explore opportunities for multimodal instruction. Using different methods of imparting information accommodates different learning styles. It also reinforces ideas and concepts given in lectures and textbooks and increases the likelihood of students grasping the material. Teachers have access to a wide variety of multimedia instructional technology. Some forms, such as presentations on CD-ROM or DVD, are especially helpful because students can access the content autonomously and at their own pace. Many of these materials are beneficial for group presentation because they may have options such as closed-captioning that facilitate learning among students of all abilities.

Advance preparation and organization are among the hallmarks of the successful student. These traits are especially important to many students with disabilities. Those with mobility limitations, for example, may select only materials relevant to the day's lessons to carry with them to class. It is helpful, therefore, to make syllabi, notes, and other course materials available as far in advance as possible. Making course materials available in advance may be essential for students with Attention Deficit Hyperactivity Disorder (ADHD) or learning disabilities that affect time management and

organization skills. Having course materials in advance is also valuable for nondisabled students with special needs for efficient organization and time management. Among them are students who care for young children or other family members and students with significant job responsibilities. Often it is helpful for students to preview subject matter before it is taught in a lecture, recitation, or discussion sessions. Many other common teaching practices—helpful to all students—can be especially beneficial for students with disabilities. Those include timely explanation of course requirements, objectives, and criteria and early announcement of deadlines for completing long-term projects and term papers. Facilitating advance preparation can make the difference between students learning the information in class or needing an outside tutorial.

During the semester

Effective techniques for lecturing and facilitating classroom discussions help all students and are particularly important for teaching students with disabilities. The specific techniques depend on a variety of factors, including specific needs of the students in the class and the instructor's own teaching style.

Instructors can use the following techniques to greatly enhance learning for students with many kinds of disabilities. These methods often reduce or eliminate the need for certain classroom accommodations because they follow "learning-centered" strategies that enhance in-class participation and academic performance for all students. More information for carrying out many of these strategies can be found in the Resources section.

Make yourself accessible. At the beginning of each term, inform students that you are available to privately discuss any issues or needs, including disability accommodations. Doing so invites students with disabilities to identify themselves early in the term without feeling singled out. Include on each course syllabus a note to the effect: "If you think you may need accommodations due to a disability, please contact the instructor and the campus Disability Services Office as soon as possible. Many services are available through the DSS office."

Syllabus, syllabus, syllabus. Provide students with a written course syllabus that includes due dates for assignments and dates for tests and quizzes. Doing so supports students' needs for advance preparation and gives the DSS office ample time to prepare alternative-format materials that students with disabilities may need. If any schedule changes become necessary, provide students with a written updated syllabus that includes those changes.

Make written material accessible and readily available. Provide

access to lecture outlines, notes, or copies of overheads for students to refer to during class. In many cases, this strategy may mitigate the need for an in-class note taker, particularly for students who are learning disabled, have ADHD, or are vision-impaired.

Think digital. Prepare course handouts and overheads as digital files. That will reduce the DSS office's time and expense in converting print materials into alternative formats. It may even allow the student to use the materials independently, removing the need for that type of assistance from the DSS office.

Speak well. In the classroom and the lab, speak as clearly as possible and use appropriate gestures. Take extra effort to speak at a moderate pace if you are accustomed to speaking rapidly or have an accent. This strategy supports optimum note-taking methods and in-class learning for all students. It is particularly helpful for students with certain learning disabilities, hearing impairments, ADHD, Attention Deficit Disorder, or psychological disabilities.

Make introductions. Introduce each lecture with a brief review of the previous class lecture to reinforce memory and cognition.

Go verbal and visual. Use both verbal descriptions and visual aids to introduce major concepts and terminology. It will help all students learn and be especially helpful for students with learning disabilities, visual or hearing impairments, or ADHD.

Assign clearly. Give assignments in both oral and written form to reach students with different learning styles.

Describe visuals. Verbally describe or explain charts, diagrams, graphs, and other information being presented in a visual format. Doing so is critical for students with vision impairments but also reinforces learning for students with certain learning disabilities that involve visual processing disorders.

Demonstrate. When possible, demonstrate new procedures to reinforce learning for students who process information either verbally or visually.

Hold office hours. Encourage students to take advantage of the instructor's office hours for further clarification of classroom or laboratory topics.

Encourage. Encourage use of cooperative learning techniques, such as working in small groups, which reinforces many learning styles and encourages active learning. Encourage students to tape lectures or choose partners to share and discuss the day's lecture notes. Encourage students to form study and discussion groups. Encourage peer learning and teaching, which promote active learning so that students can accentuate their individual strengths.

Let them volunteer. Increase waiting time after asking a question in class to give more students the opportunity to volunteer answers whenever possible, by allowing for differences in individual

response times. Doing so minimizes anxiety and accommodates the different ways students process and respond to information.

Focus on students. Use teaching materials and approaches that focus on students' experiences, opinions, and reactions to provide a frame of reference for learning new concepts.

Use accessible technology. Use technology that makes information more accessible, such as computers, assistive listening equipment, and closed-captioned videos.

Be assistive. To the greatest extent possible, help students with disabilities with the accommodations approved by the DSS office, such as helping to recruit a volunteer or paid note taker, if asked.

Instructors should contact the DSS office for assistance regarding individual needs of students with disabilities and work with the DSS office to ensure that the student receives an effective education.

Taking notes

Many disabilities make it difficult or impossible for a student to take effective notes during classroom and laboratory sessions. Instructors who routinely make their notes available to all students minimize this common barrier for students with disabilities. Remember that notes made available in digital format simplify the process of converting written material into Braille, audiotapes, and other nonprint formats.

A number of accommodations can be used when the instructor's notes are unavailable. For instance, classmates may serve as note takers for students with disabilities, sharing their notes in the form of photocopies, carbon copies, carbonless copy paper, or laptop computer files passed by e-mail or disk. Some students with disabilities can take effective notes simply by using a laptop computer in the classroom.

More formal note-taking arrangements also are available. These include using a paid note taker with prior course experience. DSS offices usually make formal arrangements for note takers. Most campus DSS centers are accustomed to providing note takers with an appropriate knowledge of chemistry. Some students who use a note taker may also benefit by tape recording the lecture and using the tape to review and make personal changes to the notes after class. FM wireless systems, which may already be available in large lecture halls, can be used for recording lectures. Students who are deaf need to have tapes transcribed. Some DSS offices provide transcription services, and others can arrange for them.

Many instructors routinely post course materials on the World Wide Web. It is critical that the course web site be accessible to students with disabilities, especially when it contains required

material not readily available elsewhere. For students who are blind or vision-impaired, for instance, it is very important to provide an alternative text-only format for web pages. Students can easily access that format with screen-reader software that converts text into audio. Screen readers cannot convert graphics into audio, so text descriptions of graphics also are important for an accessible web page. Chapter 7 discusses accessible web pages in more detail and suggests excellent sources of information for teachers and web page developers (e.g., 19).

Students with limited mobility in the classroom

Unless the building and the classroom are wheelchair-accessible, just getting there may pose a problem for students with limited mobility. If elevator access to upper-floor classrooms is unavailable, classes can be relocated to ground-level floors. Classrooms should have aisles wide enough for wheelchair users or other students with limited mobility. Doors should open without requiring students to grasp handles. Keep in mind that standard classroom desks were not designed for persons in wheelchairs. If desk height cannot be easily adjusted, simple adjustable tables can accommodate wheelchair users. Modification of other classroom areas may also be important to provide adequate accessibility. The institution, rather than the instructor, has responsibility for ensuring that facilities are accessible.

Students with limited mobility should have course schedules that provide adequate time to travel from one class to another. Closely scheduled classes in distant buildings or satellite campuses should be avoided unless the student is confident about reaching the class in time. Students with mobility limitations may be unable to reach their next room in the time allotted between classes. Faculty should be aware of this possibility if a student with disabilities arrives late for class. Those who review material from the previous class may accommodate the student by presenting the review in the first few minutes, and waiting to give the day's instructions, lab instructions, or other important information. However, it is the student's responsibility to catch-up on material missed because of late arrival. At the high school level, the student may have a 504 plan describing a formal arrangement, which, for example, allows the student to leave class a given number of minutes early.

Students who are blind or vision-impaired in the classroom

Vision impairment occurs in different forms and ranges of severity. This diversity calls for flexibility and basic knowledge about vision

Figure 1. Classroom communication techniques

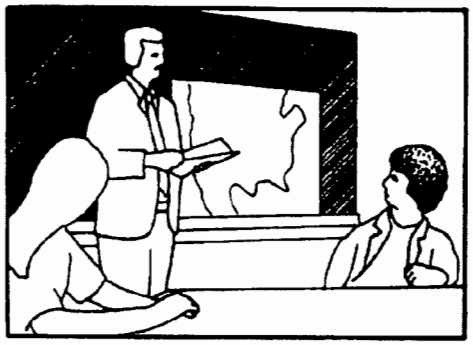

The student should choose the seat that is in the best location.

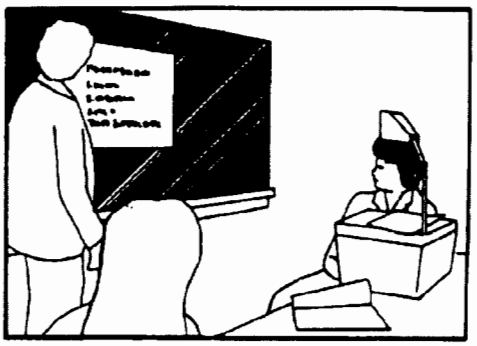

Use visual aids to supplement a presentation.

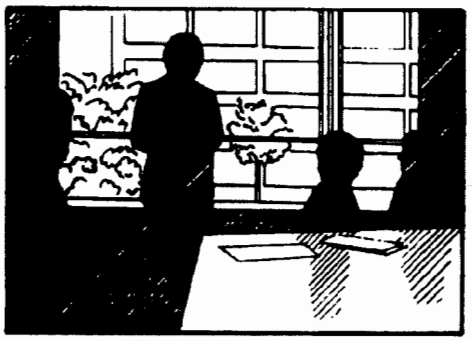

Avoid standing in front of a light source.

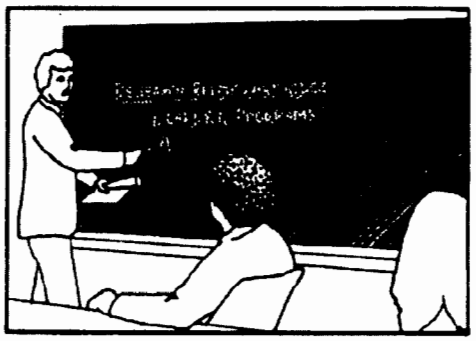

Face the class. Do not speak while writing on the chalkboard.

Provide new technical vocabulary in advance.

Make a special effort to clarify vital information.

impairment on the part of high school and college classroom teachers. Instructors should be aware, for instance, that many people with vision impairments function independently except for reading and other sight-dependent tasks. Do not assume that a vision impairment, no matter how severe, makes the student helpless. Teachers who are more knowledgeable about low vision (20, 21), usually adopt the most effective teaching techniques. Teaching students who are blind or vision-impaired can be facilitated with adequate course preparation, proper communication techniques, and specially adapted textbooks.

BEST COPY AVAILABLE

Students who are blind or vision-impaired often prefer using printed course materials that have been converted into Braille, large print, digital recordings (e.g., CDs and newer downloadable audio formats) or tape (22). Some DSS offices can obtain textbooks in alternative formats and may have assistive technology available for student use. Students should submit a request well in advance. Activities can often be modified quite easily for the high school chemistry classroom (23, 24). In general, timely responses to student requests will ensure that a course is accessible and will build rapport between student and teacher.

General communication techniques

Simple accommodations can greatly improve communication between teachers and students with vision impairments. Remember that students themselves are often the best resource for clarifying their abilities and identifying the most suitable accommodations. Begin each conversation with the student who is vision-impaired by identifying yourself and addressing the student by name. Talk directly to the student just as you would any other individual. Use a normal volume and tone of voice and your regular vocabulary and syntax. Give the student your full attention during the conversation, and look at the student. Students often will know if you are reading or engaging in some other activity during a conversation.

When walking with a student who is blind or vision-impaired, ask if you can lend a hand with navigation. If the student accepts, offer the individual your arm just above the elbow in a relaxed manner. The student can thus follow the motion of your body, which communicates changes in terrain and when you are stepping up or down. If the student uses a dog guide, remember that the dog and owner are part of a working team. Dog guides are highly trained, obedient, well-mannered animals. Teachers can be assured that dog guides will not disrupt lectures, laboratories, meetings, or other events. Dog guides wearing a harness are not pets, but working animals whose attention is focused on identifying possible safety hazards. To avoid distracting the dog, never pet it, talk to it, or feed it.

Classroom communication techniques

The student should select a seat where he or she can best view the teacher and hear the lecture. Preferred seating is especially important in poorly lit rooms, rooms where glare or unusual brightness interferes with optimal vision, or rooms with poor acoustics.

As in personal conversation, always call on the student by name in class, rather than pointing or gesturing. When referring to mate-

rial presented on overhead projectors, whiteboards, or chalkboards, use an approach that is very helpful for all students, not just those with vision impairments. It involves making specific references to visuals. For example, say "benzene," not "this compound." Say "from 20 degrees Celsius to 40 degrees Celsius" instead of "from this temperature to that." State "in the reaction of benzene with bromine" rather than "in this reaction." Excellent examples of spoken descriptions appear in *Learning Math from the Perspective of the Blind Person* (25) and *Handbook of Mathematical Discourse* (26).

When writing on chalkboards or white boards, high-contrast chalk and markers are essential for students who are vision-impaired and helpful for all students. White boards are available with attached electronic devices that generate a printed copy of the board contents. Once again, instructors can facilitate learning among all students by providing copies of the presentation, including chalkboard material and visuals.

Projection systems and computerized presentation programs like PowerPoint allow manipulation of brightness, contrast, fonts, graphics, and colors, allowing choices that may be very helpful for students with low vision. Consult the student to determine the most visible format. Students with a vision impairment termed scotopic sensitivity syndrome (27) are oversensitive to certain wavelengths of light. They may benefit from use of colored acetate overlays to improve contrast of projection system presentations (28). The digital format also makes it easy to produce printed copies of a presentation or make the presentation available to students in an alternative format. Be aware, however, that many individuals who use presentation programs unconsciously speak rapidly, which can complicate the learning process for all students.

Course preparation

Many college teachers already prepare for their classes in ways that help ensure access for students who are blind or vision-impaired. These involve standard techniques for effective teaching such as preparation and frequent updating of a class syllabus, making course materials available to students in digital formats, posting course materials to a web page, and accepting assignments submitted as e-mail attachments. These approaches also are becoming more common at the K–12 level. Some teachers prepare for all courses with the assumption that a student with a vision impairment will enroll. The approach can save time and effort when such a student does enroll. It also offers greater accessibility to course materials and facilitates learning for all students.

Essentials for designing a barrier-free course for students who are blind or vision-impaired

- Select textbooks and other required reading material in plenty of time for the DSS office to convert text into alternative formats such as Braille or obtain them from other sources. When selecting a new textbook, consider texts that are available in both standard print and digital or recorded format. Access to the digital format greatly reduces the time and expense of converting a text into Braille or other alternative formats. Alternatives to the standard textbook format may also be important for students with certain learning disabilities.
- Check with the DSS office on the amount of advance time needed to convert overheads, slides, and other printed materials into alternative formats in time for the scheduled class. Be sure to send copies of the material to the DSS office within that time frame. Materials should be available to the student in an appropriate alternative format at the same time they are distributed in print to other students.
- Prepare all classroom handouts as digital files that can be easily converted into alternative formats. The digital format also is ideal for students with visual disabilities who use computerized assistive technology such as magnification or screen-reader software.
- Provide lecture notes in an easily accessed digital format such as ASCII text or Portable Document Format (PDF). These formats can be translated to audio by programs such as "Emacspeak" (29) and JAWS for Windows (30). Class web sites with text annotations of graphics also are an excellent way to make notes and other material accessible.
- Remember that many students use IBM-compatible computers and may be unable to open files prepared with Apple Computing software. Remember that there may be compatibility issues with IBM, Apple, Unix, or other systems that faculty and students may use (campuswide systems may be Unix-based).
- Print course materials using the paper and ink color combination that each student with low vision identifies as the most visible. In general, strive for high contrast and low glare.
- When using a course syllabus, include all dates for tests and due dates for assignments. Distribute a revised syllabus to the class and to the DSS office if the schedule changes. DSS personnel often coordinate their schedules with the syllabus. They need to know if the schedule changes; if they are not informed about schedule changes, students may not have timely access to course materials.
- Remember that students with visual disabilities may wish to tape record lectures, even when they use a note taker, so they can

annotate and personalize the notes.

- Encourage students to e-mail completed assignments for grading, enter appropriate comments into a return message, and e-mail the graded work directly back to the student.

Instructors who review the solution to problems in class should consider using overhead transparencies, rather than a chalkboard or standard whiteboard. Solutions on transparencies can be photocopied or scanned into digital files. Photocopies can be made available to all students, including those with vision impairments. Digital files can be posted to the class web site, along with PowerPoint presentation slides and other materials.

Students who are deaf or hearing-impaired in the classroom

Effective teaching of students who are deaf or hearing-impaired requires instructors with skills and approaches important for teaching all students. For instance, instructors should speak clearly and at a moderate pace, face the class, avoid introducing excessive new jargon, and stick to the lecture topic. Like their hearing peers, students in high school and college who are deaf value teachers who have extensive knowledge of course material, use visual materials, present materials in an organized manner, provide clear explanations, and are friendly and caring (31–33). Active participation in classroom activities, such as asking and answering questions that elaborate on lecture material, is as important for students who are deaf as it is for hearing students. In general, students who are deaf and who participate earn higher grades. Indeed, participatory learning means higher academic achievement for students who are deaf as well as hearing students, and teachers should consider using more active-learning opportunities (24, 33).

Face the students

Successful teaching of students who are deaf requires attention to a few additional points. The student should choose the most suitable seating position in the classroom. Teachers should keep their faces fully visible to the class when speaking and make sure their lips are in the line of sight of the student who is deaf. When pointing to slides or other visuals, avoid speaking with the head turned away from the class. Instead, turn the head briefly to refer to the visual, and then turn back to the class to discuss it so the student can see lip movements. When presenting material on chalkboards or white boards, the teacher should write first and then discuss the material facing the class. Breaking the habit of talking to the screen or chalkboard can be quite difficult. Some instructors establish an

unobtrusive signal that the student can give during a lecture if the instructor lapses. Like other conscientious students, those with hearing loss are extremely concerned about missing portions of a lecture. Students who are deaf or hearing-impaired are encouraged to remind teachers who repeatedly turn away from the class while lecturing.

Use visual cues

When addressing a question to the student who is deaf, the teacher should first establish eye contact, so the student knows that he or she is being called upon. Many instructors naturally point or gesture toward students when addressing questions. This can be especially helpful for the student who is hearing-impaired. Some teachers designate a certain spot in the room to begin each lecture as a signal that the formal note-taking period has started.

Students who are deaf or hearing-impaired depend heavily on visual cues to follow classroom presentations. Those who speech read must be able to see the speaker's lips. Students who use a sign language interpreter or oral interpreter must have a clear view of the interpreter. Many students who are deaf prefer real-time captioning, in which a captioner keyboards spoken words for display on a screen or computer monitor. In each instance, good lighting is essential. Without it, students who are hearing-impaired will not have the same chance to learn the lecture materials as other students in the class. When showing videotapes, slides, or other visual materials that normally require a dark room, instructors should maintain enough light so students who are hearing-impaired can still see the instructor and interpreter. All students, of course, need adequate light to take notes during visual presentations.

Unfortunately, older classrooms often have poorly designed lighting systems and may require often-simple modifications to ensure adequate light. For instance, installation of a dimmer switch will allow the instructor to maintain enough light during visuals. A separate "spot light" will ensure that the instructor or interpreter is visible in a darkened room.

Include pauses

Pauses during classroom presentations can be especially helpful for students who are deaf or hearing-impaired. They often must coordinate multiple tasks at the same time—speech reading the instructor's spoken words while simultaneously taking notes; reading written material on overheads or whiteboards; or watching a demonstration, film, or video. A potential problem arises because many students who are deaf receive and process only visual information, instead of visual information supplemented by auditory

cues. A student who looks down to a computer keyboard for a few seconds may miss critical information from the interpreter. A student who looks at the interpreter may miss visual cues that help explain the information from the instructor, who may be pointing to a reaction or structure on a screen or whiteboard. To compensate for this situation, instructors can glance at the student periodically to see if the pace is appropriate. Instructors should be aware, however, that an increasing number of students who are deaf have cochlear implants, electronic devices designed to produce useful hearing and better communication. Students with cochlear implants do get auditory cues, and the instructor's classroom pauses may be less important or unnecessary. This diversity of needs is another illustration of the importance of customizing accommodations for each student.

The student's full participation can be greatly enhanced if the instructor pauses occasionally during the presentation so that students can catch up. Pausing is particularly important in cases in which the student is using only an interpreter or captionist with no note taker. The interpreter may need a few seconds to complete processing lecture material, for instance, before he or she can relay a question to the student. The instructor can help by recognizing the existence of such time lags and pausing. Teachers can also consider using more written communication in the classroom. Rather than asking a question and calling upon one student, a teacher might ask all students to respond to a question by writing their answer on an index card.

Repeat questions

Without an interpreter, students who speech read generally won't be able to understand or follow a conversation or question that originates behind them or out of their line of sight. They also will not know what questions have already been addressed—a fact that makes many students reluctant to ask questions and become involved in classroom interaction. Some students who are deaf may avoid asking questions because they know other people have difficulty understanding their speech.

The teacher can respond to these situations by repeating questions asked by other students: "The question was..." This repetition also is helpful for hearing students who may have missed or misunderstood the question. During discussion sessions, the teacher can help the student with a hearing impairment by controlling the pace of the discussion and encouraging only one student to speak at a time. This strategy can benefit able-bodied students and those with learning disorders or other disabilities. Instructors also may consider summarizing classroom discussion orally or on the chalkboard at logical points in each lecture.

Assistive technology

Students who wear a hearing aid may request that the instructor use a microphone compatible with assistive technology, called an FM loop system, if one is available. In this system, sounds are transmitted by FM radio waves directly to the hearing aid. It significantly reduces background noise and improves comprehension. An FM system can be used with many types of microphones, which usually are provided by the student, DSS office, or AV technician. These include a transmitting clip-on microphone worn by the instructor, a tabletop microphone designed to pick up a group discussion, or microphone on a cable that the student can hand to a nearby person who is speaking. Such systems can also link directly to a tape recorder to provide lecture notes for later transcription.

Instructors also are likely to encounter another increasingly important form of assistive technology for students who are deaf or hearing-impaired—real-time captioning. It involves a typist, often specially trained and certified, who keyboards classroom discourse into a computer as it occurs. The text appears on a second laptop or monitor for viewing by the student. The captionist also may provide the student with printed notes or an electronic file of the transcript. Closed-captioning is also being used more regularly on videotapes. The captions are not visible unless activated by a decoder. The Television Decoder Circuitry Act of 1990 requires that all 13-inch or larger television sets manufactured after July 1993 have a built-in decoder. Unfortunately, few instructional chemistry films or videotapes were closed-captioned as of this book's publication. However, the American Chemical Society is committed to captioning all new videotapes it produces.

Many students who are deaf or hearing-impaired use wireless communications devices, like the Wyndtell pager (34), which provide interactive TTY chat, pager-to-pager chat, e-mail, fax, and other services.

Students with learning disabilities or ADHD in the classroom

Learning disabilities include a broad group of information-processing disorders, which the National Center for Learning Disabilities describes as

...neurological disorders that interfere with a person's ability to store, process, or produce information, and create a "gap" between one's ability and performance.... Individuals with learning disabilities are generally of average or above-average intelligence. Learning disabilities can affect one's ability to read, write, speak, or compute math, and can impede social skills. Learning disabilities can affect one or more areas of development. Individuals with

learning disabilities can have marked difficulties on certain types of tasks while excelling at others.

The presence of a learning disorder has no inherent influence on a student's probability for success in science, mathematics, or engineering. Most individuals with learning disorders have normal or above-normal intelligence, and some have achieved truly stellar careers in science, business, and other fields. Students usually develop or learn appropriate coping mechanisms that compensate for their specific learning disability. However, because the impact and severity of these disorders varies substantially among individuals, tailored educational strategies are sometimes necessary. Implementing these programs requires close cooperation among the student, parents, instructors, and others involved in the educational process.

At the K–12 level, educational strategies for students with learning disorders are coordinated by an Individualized Educational Program (IEP) team. The team develops an IEP for the student, which is a written plan describing accommodations and other measures to ensure an effective education. At the postsecondary level, the college DSS office works with the student and the instructor to ensure effective accommodations.

Among the most common accommodations for students with learning disabilities are

- alternatives to conventional print materials in the classroom, such as audiotapes;
- note-taking services or use of a tape recorder to tape classroom presentations;
- alternative testing conditions, such as extra time, a reader or tape-recorded version of the test, and a quiet testing room to minimize distractions;
- use of a computer with spell-check software;
- use of a calculator;
- preferential seating in the classroom;
- panels at the sides of the desk to block visual distractions;
- classroom use of a small FM radio system, sometimes called a personal auditory trainer, which acoustically suppresses distracting background noise and makes the teacher's voice louder and clearer; and
- a modified course load.

For high school chemistry courses, these and other accommodations usually are listed in the student's IEP. The chemistry teacher usually works with the IEP team to develop and implement the accommodations.

Converting textbooks to audio format

Many textbooks are currently available from Recordings for the Blind and Dyslexic (RFB&D) (16). RFB&D is the nation's largest nonprofit organization providing textbooks and educational materials in accessible formats for students who cannot read standard print effectively because of vision impairment, dyslexia, or other physical disabilities. RFB&D's library includes more than 83,000 taped and electronic textbooks in a variety of grade levels and academic subject areas. The organization's digital texts can be converted by text-to-speech computer software and read by a voice synthesizer. E-texts can also be enlarged for easier reading on a computer monitor or output to Braille printers. RFB&D circulates about a quarter-million accessible textbooks to its 91,000 members annually. If a textbook is not already available in audio format, RFB&D may convert it. This recording service is free to institutional and individual RFB&D members. The time necessary for conversion varies with several factors, including the book's length. This need for adequate lead time is one reason why it is important for teachers to select textbooks months in advance and make the selections known to the DSS office. RFB&D can provide additional information about conversion times. Another source for audio textbooks and e-texts is the Texas Text Exchange, a consortium that makes electronic texts available on the Internet. If not enough lead time exists for this option, textbooks can be taped locally by using a 4-track tape recorder available from the American Printing House for the Blind. APH tape recorders provide a tone indexing system for inserting an audio tone at the start of each page. With the top-of-page tone, readers can quickly forward or rewind the tape to reach a desired point. Texts can also be converted to e-text by scanning to a file saved in text format. See the Texas Text Exchange Web site for more information (36).

Knowlegeable local volunteers can volunteer to record books onto tape. Readers should remember the following:

- When reading mathematical equations, it is important to indicate the numerator and the denominator and be clear about the quantities being multiplied, divided, added, or subtracted. For example, the equation

$$x^3 + \frac{2}{y^{2+1}} = 14$$

  should be read as "x to the third power, plus fraction: numerator two over denominator: y squared plus one, that equals 14."
- If a sentence is broken over two pages, finish reading the sentence before stating the next page number.
- Read all subheadings, footnotes, and references.
- When reading tables onto tape, read the titles of tables, then the titles of each column or row before reading the data that are being presented. It should be left up to the reader to decide the most logical way to verbalize the material and describe chemical and other technical notations.
- When describing pictures or illustrations within the text, the reader should state figure and caption numbers before starting a verbal description of the image. After completing a verbal description of the image, the reader should say "return to text" to indicate a return to the text material. If the reader is unable to provide an adequate description of the image, he or she should simply read the caption. When possible, a tactile image can be provided to supplement the recordings, such as a raised-line drawing (see sidebar, Accessible overheads and other visual aids).

Accessible overheads and other visual aids

The use of visual aids in the classroom and illustrations in text reinforces information by providing it to students in different ways. Even though the student may have difficulty seeing or be blind, visual aids should still be incorporated into lessons when possible. Students with vision disabilities have many ways of learning from graphics, including the use of raised-line drawings (18, 37). Students can also learn from visual aids in class if the instructor gives a detailed oral description of the material. Such material is best described in a consistent fashion, such as clockwise or left to right. 3-D models of structures described in class also can be helpful for students with vision impairments.

The Science Access Project at Oregon State University (38) has developed several accessible visual aid technologies, including a speaking scientific calculator; a graphic method of presenting scientific and mathematical information for the blind; and the "tiger printer," which prints standard English and Braille simultaneously. If such advanced technology is not available, visual aids can often be made more accessible to blind students in other ways. Faculty on many campuses use work-study students or student assistants to make raised-line drawings and other alternative formats.

The following are among the approaches often used to make visual aids more accessible.

- Verbal descriptions of all figures and graphs, including those on the chalkboard, in slides, or overheads. They should be numbered and referred to by number to simplify note taking.
- Raised figures and graphs can be prepared with thermal heat pens, glue guns, fabric paint, tracing wheels, or Wikki Stix. This wax-formula yarn sticks together and to surfaces to create 3-D representations of objects.
- Other readily available inexpensive materials, such as pegboards, golf tees, and rubber bands, can be used to prepare excellent tactile graphs and figures. Small portable white boards are handy for drawings that students with low vision can hold at the best viewing distance.
- A felt board with Velcro shapes can be a highly effective aid for illustrating structural formulas.
- A clipboard wrapped in wire mesh can be used to make tactile figures and graphs. Wrap wire mesh around the clipboard to form a "screen," clip a sheet of paper over the screen, and draw with a crayon by pressing down hard. The resulting lines will be raised enough to serve as a tactile design.
- Electronic white boards are available for use in lecture classes. These can be connected to a laptop computer. A refreshable Braille display connected to the computer, or other technology, will make the visuals immediately accessible.
- A variety of line formats and color-coding enhances the distinction between multiple lines on the same graph. Plots might be made in colored solid lines, dotted lines, dashed lines, and so forth.
- When doing demonstrations, encourage the student to examine the setup through touch whenever possible. In addition, use clear verbal descriptions of what happens during the demonstration, including color changes, releases of gas, crystal formation, and precipitations.
- Give verbal descriptions of videos used in class or lab. Some videos are available commercially in this format through organizations such as the Public Broadcasting Service and the National Geographic Society. WGBH Media Access Center and EASI provide video transcribing services.

Large-print and Braille periodic tables are available from Science Kit and Boreal Labs (39). Braille periodic tables can be obtained from the National Braille Association (40).

Science jargon and the interpreter

Interpreters in chemistry classrooms and laboratories ideally should have an appropriate knowledge of the subject material and experience in converting scientific terms into signs. Interpreters with adequate knowledge of chemistry often can be found on the high school level. In many instances, however, it is impossible to find interpreters who are familiar with more advanced chemistry concepts and terminology for the undergraduate and graduate student. Students often have two choices. One is an interpreter with excellent interpreting skills, but relatively little academic background in chemistry. The other is a less-skilled interpreter with a stronger knowledge of chemistry. Which will serve the student better? The answer depends on individual circumstances and needs. Some students, however, have found that interpreting skills are of primary importance.

Instructors should be aware that many scientific terms have no specific counterparts in sign language. That is especially common in new or rapidly evolving scientific fields in which terms are constantly being coined. In these situations, the interpreter usually will finger-spell the word.

The instructor can help by writing new terms on the chalkboard or overhead transparency so the student can see the word. A brief written definition, or clearly stated oral definition, also is helpful. Try to alert the student or the interpreter in advance before making a presentation that will include a great deal of new terminology. If possible, provide the vocabulary in advance, or suggest textbook pages or other references that can assist the interpreter and student. That will allow the interpreter time to research the sign. The student and the interpreter sometimes work together in advance to agree on signs for new terminology, acronyms for the terms, or abbreviations. However, it also is common and accepted practice for the student and the interpreter to develop and agree on new sign vocabulary "on the fly"—on a real time basis in the classroom. One resource for scientific sign language is the Technical Signs Project at the Rochester Institute of Technology's National Technical Institute for the Deaf (41). Their book, *Signs for Science and Mathematics: A Resource Book for Teachers and Students*, offers suggestions to teachers and interpreters about the use of technical signs in the classroom (42).

At the postsecondary level, the student is responsible for requesting classroom accommodations. The DSS office verifies student eligibility for accommodations and consults with the student and faculty member regarding reasonable and effective accommodations (see sidebar, Working with the DSS office, on page 19).

ADHD, although not strictly a learning disability, has an impact on a sizable number of students at the K–12 and postsecondary levels. ADHD is a disorder that affects learning and behavior. Contrary to general belief, ADHD is not just a childhood disorder. It often persists into late adolescence and adulthood. ADHD generally includes some of the following: inattention, distractibility, impulsiveness, and hyperactivity. Symptoms, however, can differ greatly from individual to individual. For instance, some individuals with short attention spans may be easily distracted but show no other symptoms. A significant number of individuals diagnosed with ADHD also have learning disabilities. The student with

Simple classroom strategies for students with learning disabilities, ADHD, and central auditory processing disorder

Instructors can use the following strategies and techniques to help students with learning disabilities better understand materials and concepts.

Environmental

Minimize noise and other distractions; ensure preferential seating assignments; and accommodate students who use adaptive technology, such as FM loop auditory systems.

Curriculum material

Use advance organizers, framed outlines, graphic organizers, and other techniques to enhance understanding. An advance organizer relates material in the last class to new material being presented in the current class to help students identify relationships between issues and ideas. It may be as simple as a chalkboard list of concepts presented in the last class that the instructor refers to when presenting new material. Framed outlines are partially completed outlines in which students fill in the missing information as they study. Graphic organizers are common graphic devices that illuminate the relationships between events, such as flow charts, depiction of cycles, and Venn diagrams.

Instructional

Provide a syllabus in advance, use frequent brief reviews in lectures, and use multimodal instruction (24). A mini-syllabus outlining the day's class will help keep students oriented. Use molecular models to teach balancing equations, which gives a concrete rather than abstract description of the problem. Provide real-life examples and practical applications because some students move forward only when concepts are made less abstract to them.

Textbooks

Early selection is critical to ensure ample time for DSS personnel to arrange for a recorded version that some students may need. Give students with learning disabilities time to familiarize themselves with the textbook before the semester begins.

Assignments

Adhere to a syllabus whenever possible. If the syllabus must be revised, provide the new version promptly to the class and the DSS office. Accept assignments in different formats, such as e-mail attachments or audiotapes. Student use of instructional aids such as calculators and word processors can be helpful. Vertically lined paper helps students with certain learning disabilities balance equations and math problems, because the vertical spatial organization decreases confusion. Have students work equations from the top down, adding the full molecular formula on each succeeding line, while keeping each formula aligned as they work. Writing the full formula in this way can serve as a transition from using physical models to working on paper, and reinforces other important concepts (see sidebar on page 40).

Teachers should work with students and DSS personnel or the IEP team in developing other creative approaches for effectively teaching students with learning disabilities. An excellent discussion of ADHD and coping strategies used by college students appears in the book *Succeeding Against the Odds—Strategies and Insights from the Learning Disabled* (43). It also includes an extensive list of resources. The National Center for Learning Disabilities offers information, referral, advocacy, and outreach for individuals with learning disabilities. Other sources include a large number of web pages on learning disabilities and alternative teaching methods (44).

Balancing Equations

Two viable approaches to balancing equations are the "whole molecule" and the "Atom Tally Table." The following steps and the accompanying diagrams illustrate both methods. Please note, convention suggests that carbon should be the first element balanced and oxygen the last.

Whole Molecule Approach

$$C_3H_8 + O_2 \longrightarrow CO_2 + H_2O$$
$$O_2 \qquad CO_2 \qquad H_2O$$
$$O_2 \qquad CO_2 \qquad H_2O$$
$$O_2 \qquad\qquad H_2O$$
$$O_2$$
$$C_3H_8 + 5\,O_2 \qquad 3\,CO_2 + 4\,H_2O$$

Given the equation that must be balanced,

- Create an Atom Tally Table by listing the kinds of atoms present in the equation.
- Examine the unbalanced equation and record the number of each kind of atom for both reactants and products in the tally table.
- Balance the equation:

Step 1. Balance the number of carbon atoms. Think: since there are 3 atoms of carbon on the reactant side, there must be 3 atoms of carbon on the product side. Each molecule of carbon dioxide has 1 carbon atom. Therefore a total of 3 molecules of CO_2 are needed.

Whole Molecule Approach: Two additional molecules of carbon dioxide are needed on the product side. Represent these 2 molecules by writing the formula for carbon dioxide twice under the CO_2 in the original equation.

Atom Tally Table: Since 3 atoms of carbon are needed on the product side, next to carbon in the Starting Number column, cross out the "1" and place "3" in the Step 1 column. Complete the Step 1 column by noting that 2 atoms of hydrogen remain on the product side but the number of oxygen atoms has increased to 7.

Step 2. Balance the number of hydrogen atoms. Think: There are 8 atoms of hydrogen on the reactant side so 8 atoms are needed on the product side. Each water molecule contains 2 atoms of hydrogen so a total of 4 molecules of water are needed.

Whole Molecule Approach: Represent the three additional molecules of water needed on the product side by writing the formula for water 3 times under the H_2O in the original equation.

Atom Tally Table: Since 8 atoms of hydrogen are needed on the product side, cross out the "2" in the Step 1 column and place "8" in the Step 2 column. Complete the Step 2 column by noting that 3 atoms of carbon remain on the product side but the number of oxygen atoms has increased to 10.

Step 3. Balance the number of oxygen atoms. Think: There are 10 atoms of oxygen represented on the product side as a result of balancing carbon and hydrogen. There are 2 atoms of oxygen represented on the reactant side. Each molecule of oxygen contains 2 atoms so a total of 5 molecules are needed on the reactant side.

Whole Molecule Approach: Four additional molecules of oxygen are needed on the reactant side. Represent these 4 molecules by writing the formula for oxygen 4 times under the O_2 in the original equation.

Atom Tally Table: Cross out the "2" in the Starting number column under Reactants and place "10" in the Step 3 column. Complete the Step 3 column by noting that there are 3 atoms of carbon and 8 atoms of hydrogen on the reactant side.

Step 4. Write the balanced equation, summarizing the changes that have been made.

Atom Tally Table

REACTANTS			PRODUCTS		
Step 3	Starting No.		Starting No.	Step 1	Step 2
3	~~3~~	C	~~1~~	~~3~~	3
8	~~8~~	H	~~2~~	~~2~~	8
10	~~2~~	O	~~3~~	~~7~~	10

BEST COPY AVAILABLE

Late diagnosis of learning disorders

Despite increased public and professional awareness about learning disorders, late diagnosis of these conditions is all too common. Some scientists and engineers with learning disorders struggled in high school and college before finally discovering the reason for their academic difficulties (1). Teachers can play an important role in that discovery process. Suspect a learning disorder when a hard-working student is having difficulty in a course for no apparent reason. Tact and discretion are essential. Some students are aware of a learning disorder, but for a variety of reasons, choose not to self-identify. Such students, for instance, may feel that they do not need accommodations in some or all classrooms.

At the high school level, teachers can consult with guidance counselors about the reasons for below-par academic performance and raise concerns about the possible existence of an undiagnosed learning disorder.

At the college level, teachers can meet with the student in private to review academic performance and explore possible reasons for low grades. When none are obvious, some teachers suggest that the student consult with DSS personnel about testing that can determine the existence of a learning disorder.

ADHD may need accommodations that vary with the condition's symptoms, severity, and the presence of learning disabilities.

Students with learning disabilities or ADHD benefit from a variety of teaching styles, especially interactive techniques such as the use of visual aids, molecular models, and other 3-D structures that they can manipulate. Some find it helpful to repeat instructions back to the teacher or otherwise clarify instructions so they understand exactly what is expected. Others simply need more time to process information. Difficulty in quickly retrieving or accessing specific words may discourage students with language-based learning disorders from participating in class discussions. These students will frequently struggle when called on unexpectedly. Yet, they may excel when given the opportunity to raise their hands to answer questions. Some may prefer to write down classroom questions and seek answers from the instructor outside of class. Group work and cooperative learning techniques can be helpful. They encourage students to discuss material with their peers in a small group and assume roles that highlight their strengths rather than their weaknesses. Many of these learning-centered techniques benefit all students in the class.

Filtering out background noise may be difficult for students with learning disabilities, a central auditory processing disorder, or ADHD. The noise may become a distraction that interferes with classroom learning. These students often benefit from seating that maximizes their ability to focus on the teacher's presentation. They will also benefit when the teacher controls the pace of classroom discussions, with only one person speaking at a time. Directed questions and group discussions can help students with ADHD

focus on the classroom topic. Like other students, they will learn best from an instructor who is well organized and provides a complete syllabus at the beginning of the term. The syllabus should include specific objectives, a list of topics to be covered, and other information that will accommodate students with disabilities and benefit the entire class.

Other disabilities and individual accommodations in the classroom

In addition to the physical disabilities and learning disorders, other conditions can temporarily or permanently affect students in the classroom or laboratory. For example, students with chronic health impairments may need accommodations on an intermittent basis when symptoms occur. These include students with intermittent, variable, or progressive disabilities such as muscular dystrophy, multiple sclerosis, or rheumatoid arthritis.

Some students may be very skilled at compensating for their disability and function extremely well at times. This may lead to the mistaken impression that the student is not really disabled or does not need accommodations. At the K–12 level, teachers must follow the IEP. At the postsecondary level, the DSS office, not the instructor, makes those determinations. If the student's disability has been documented with the DSS office, and the DSS office has authorized accommodations, the institution and instructor are obligated to provide them. The student, of course, has the right to decline accommodations and may choose to do so when a health problem is in remission or at other times. Burgstahler (35) has prepared a concise list of strategies for classroom activities and other activities such as field trips.

Students also may become temporarily disabled because of accidents, surgery, or other events. In these instances, the teacher and the student can work together informally to arrange minor classroom accommodations. However, even students with temporary disabilities may benefit from a referral to DSS offices for support services.

Chapter 3
TESTING AND EVALUATION

Few aspects of the academic testing and evaluation process are more critical—and yet the source of more misunderstanding and concern—than measuring the academic performance of students with disabilities. The student with disabilities should be evaluated with the same criteria and on the same scale as able-bodied classmates. This process often requires accommodations by the teachers, such as extended testing time; tests administered in recordings or other alternative formats; or testing in a quiet, distraction-free room. It can lead to concerns over whether the accommodated testing process compromises academic standards.

Faculty can be confident that accommodations do not represent a lowering of standards or a separate set of standards for some students. Testing all students under the same conditions may not be the fairest way to measure understanding and knowledge. The goal of testing is to measure knowledge of the subject—not the student's ability to grasp a pen, write quickly, read print on paper, or concentrate despite classroom background noise and other distractions. Unless accommodations are available to many students with disabilities, the testing process invariably becomes an evaluation of "knowledge plus"—knowledge of coursework, plus physical and psychological abilities.

In high school, the student's Individualized Education Program (IEP) defines the appropriate testing and evaluation methods. Many are quite similar to the accommodations described below for postsecondary students. In college, it is the student's responsibility to request testing accommodations and work with the DSS office and, ideally, with the faculty member to find the most appropriate accommodations. The DSS office should then send a letter to the faculty member confirming that the student has a documented disability and is entitled to accommodations. The letter should include a list of the agreed-on accommodations. Once this step is completed, the student still has responsibility for requesting the accommodations from the instructor, and the instructor has the responsibility of complying. The accommodations list is not etched in granite. It can be changed as the semester progresses and the student and instructor gain experience with the accommodations and the demands of the class. When accommodations are not sufficient, the student, faculty member, and DSS office staff should discuss alternatives.

Past accommodations as a guide

Most postsecondary students who cannot take written examinations

BEST COPY AVAILABLE

in the usual manner already have practical, workable alternatives that worked well in their precollege education. High school chemistry students may need to settle on a mutually satisfactory method with the teacher. The National Federation of the Blind's *Post Secondary Educational and Career Development: A Resource Guide for the Blind, Visually Impaired and Physically Handicapped* offers helpful suggestions on testing alternatives (45).

It is important to seek information from the student about the best way he or she can demonstrate knowledge of the course material. Teachers working with a student for the first time may also wish to consult colleagues who have experience in providing accommodations. However, there is no substitute for a meeting among the teacher, the student, and DSS personnel.

Accommodations in the testing and evaluation process are rarely burdensome for the teacher. Consider, for instance, the process for administering tests in an alternative to the standard print format. Instructors already have the basis for alternative formats in the digital file used to prepare the test. The word processor file can easily be modified to produce large-font versions for students with vision or learning disabilities. A student's speech-synthesizer software can "read" the file and convert it into audio. The file also can be converted quickly and economically into Braille. Generally, the instructor does not have responsibility for the actual conversion, which is done with the student's technology or by the DSS office.

Not all accommodations require a separate testing room. The decision to use a private room is made by the DSS office or the instructor, not only by the student. A separate room should be used only if the accommodation interferes with other students in a testing situation or the student has a disability that requires solitude in testing situations. Students with disabilities often can be tested alongside their peers by using methods that avoid distracting other students. For example, a student can wear an earplug to listen to a computer with speech synthesizer software that "reads" the test. Likewise, the student can remain in the main classroom while reading a Braille version of the test generated from the digital file.

A separate room may be important if the testing accommodation requires

- a reader,
- extra time,
- extra desk space to spread materials,
- special lighting,
- a Braille writer, which tends to be noisy,
- access to electric outlets,
- other assistive technology that is not located in the classroom, or
- other activity that would distract classmates.

FYI for high school students on SAT and ACT

Administrators of the Scholastic Achievement Test (SAT), the American College Test (ACT), and the Advanced Placement Chemistry Test have established procedures for accommodating students with disabilities.

Eligibility for accommodations on standardized tests must be verified well in advance of the examination date. Students, parents, and counselors should consult the web pages of the College Board (46) and other testing agencies for forms and details about the necessary documentation.

High school students who are vision-impaired may need a qualified reader, an individual with the appropriate educational background to understand test questions and context. It is very important that the reader selected for the exam has sufficient training, knowledge, and experience to translate, read, and record accurately. For chemistry tests, the reader must be familiar with chemical nomenclature and terminology.

Some students with disabilities may need extra time to take tests and can be accommodated in the regular classroom. Time limits can present a tremendous competitive disadvantage to students with certain disabilities for reasons unrelated to their understanding of the material. The teacher, the student, and DSS personnel should work together to determine the amount of extra time that is reasonable.

In post-test classroom explanations of the correct answers, care is needed to ensure that all students can follow the often rapid-paced discussion, which may be difficult for students who are deaf or hearing-impaired or have learning disabilities.

Developing accommodations for students with disabilities can spark the creativity of instructors and encourage reevaluation of traditional approaches to testing and evaluation. Educators now realize that all students may benefit from a variety of assessment methods. Written tests are not the only way for students to demonstrate their grasp of a subject. Oral presentations, projects such as posters or models, group projects, take-home tests, and oral exams are among a rich assortment of alternative testing methods that may be appropriate for all students. Some of these methods may be particularly helpful for students with learning disabilities or ADHD (for ideas, see 24).

Testing and evaluation of students with limited mobility

Students with disabilities that affect the ability to write quickly benefit from extra time, access to voice recorders, computers, voice recognition software, or scribes to record their answers on the exam. For tests or assignments completed outside of the lab or classroom, it can be helpful for students to submit answers orally or in a digital format such as e-mail, disk, video, or CD-ROM. Lab stations must, of course, be accessible when testing in the lab. See the discussion on directed laboratory assistants and the lab practicum in Chapter 5.

Testing and evaluation of students who are blind or vision-impaired

Most students who are blind or vision-impaired can take exams with minor modifications, which might include

- using tests on tape or in Braille, with the student recording answers in either format;
- using talking calculators equipped with an earplug;
- using a computer or writing guide; or
- printing tests in large print and high contrast.

Others may benefit from additional accommodations such as a qualified reader who is knowledgeable about the subject. Graduate students taking qualifying examinations need readers who are highly knowledgeable in the field. Testing in some topics and for some students may involve providing tactile graphs or 3-D models. These, of course, must be prepared in advance of the test.

Testing of students who are blind or vision-impaired usually requires other advance planning. Some students who are vision-impaired may need paper of nonstandard size. A Braille version of the test can be generated quickly from a digital file using widely available text-to-Braille software. If the software does not include scientific and mathematical Braille, it can be upgraded for the science classroom. Care should be taken to verify that the software performs an accurate and complete conversion to Braille.

Remember that the language of chemistry is not purely descriptive, and errors can occur. A graduate student or advanced undergraduate can help by checking the translation with the aid of a Braille reader. When the necessary software or hardware is unavailable, local societies for the blind will often convert tests into Braille, but they should be contacted well in advance to find out the amount of time they require.

Testing and evaluation of students who are deaf or hearing-impaired

Students who are deaf or hearing-impaired generally can take the same written examinations administered to the rest of the class. To understand oral instructions, however, they will require the same accommodations used during regular classroom sessions.

Written tests, however, may not be the most equitable way of evaluating students who became deaf very early in life, before acquiring language skills. Students who became deaf before learning to speak often have difficulty expressing themselves, which is largely due to the difficulty in learning to read and write a language they have never heard. English is a second language for some deaf students. As is often the case in a multicultural class-

room, students' level of learning cannot always be measured by their ability to read and express themselves in written English. The same situation exists for students with learning disabilities. Therefore, when grading tests, care must be taken to distinguish the student's grasp of the subject matter from deficiencies in English language skills.

Testing and evaluation of students with learning disabilities or ADHD

Simple testing accommodations often produce remarkable improvements in the performance of students with learning disabilities. Sometimes these involve nothing more than testing in a quiet room without distractions, providing extra table space or paper to write answers, or authorization to write answers directly on the test rather than on a separate answer sheet.

Testing accommodations for students with learning disabilities usually are consistent with classroom accommodations approved for the disability. One example is the student with a severe reading disability who supplements print materials with textbooks on tape. The student may also be eligible for testing accommodations that use taped questions and responses. Similarly, when a learning disability interferes with understanding of written material, the student may need to orally inquire about his or her understanding of each question and receive clarification from the instructor.

Among the testing accommodations commonly approved for students with documented learning disabilities:

Alternative timing and scheduling. The student gets more time to complete the test, the opportunity to take breaks and move around during the test, or takes the test in short segments.

Alternative settings. Testing is done in a quiet room free from distractions, or the student can use earplugs or headphones to block sounds or a study carrel with barriers to block visual distractions in the regular classroom.

Alternative response. The student answers test questions orally, with an oral language board or other mechanical aids, via a scribe, or by using a computer with dictation or other assistive software.

Spelling or grammar aids. For example, spell-check or grammar-check software, a Franklin Speller, or a calculator.

Alternative test formats. For example, a recorded version of the test or a paper version that includes bigger spaces for writing answers.

In grading the test, instructors can take extra care in evaluating written comments, focusing on content of the answer. Care also must be taken to distinguish the student's grasp of the subject matter from deficiencies in English language skills.

Chapter 4.
ASSISTIVE TECHNOLOGY AND ACCESSIBLE COMPUTING

New and improved assistive technology has greatly increased access for individuals with disabilities (4). Adaptive hardware and software that facilitate computer use among individuals with a variety of disabilities have become widely available (e.g., see 47). These new assistive technologies cover a broad spectrum of uses.

Students with limited mobility, for instance, can use voice input, word prediction, alternative keyboards and keyboard aids, mouse alternatives, comfort and ergonomic aids, and optical character recognition (OCR) programs. Students with vision impairments can use OCR, screen readers, Braille output programs, screen enlargement programs, print text enlargement functions, Braille note takers, and writing tools like Inspiration. Students with learning disabilities can benefit from hearing protectors to minimize distractions and tools that provide visual cues. A wide selection of products is available from computer manufacturers, software companies, and third-party vendors. Many companies and organizations, such as Apple, Closing the Gap, the Trace Center, Kurzweil, IBM, and the International Braille and Technology Center (48), have established technical assistance and support centers for persons with disabilities (49). One highly recommended resource is Disabilities, Opportunities, Internetworking, and Technology (DO-IT), a program at the University of Washington that provides an extensive summary of assistive technologies for specific disabilities (50).

Benefits of computer technology

Computer technology gives students with disabilities access to a wide variety of resources, helps reduce barriers to information, provides expanded opportunities for efficient communication with faculty and other students, and reduces the need to unnecessarily move about the campus (51). Students with disabilities should become proficient with computers starting as early as possible in their K–12 years. Fortunately, students who have reached their first year of college often are very proficient in the use of personal computers and the Internet. Those skills are central to the daily work of students, faculty, and practicing scientists. The use of personal computers for molecular drawing and modeling has become as common as its use in reporting, managing, and communicating information. Computers are essential to the control and operation of most modern scientific instrumentation and manufacturing equipment. The information obtained from these instruments is usually digital and thus becomes accessible over networks and

BEST COPY AVAILABLE

serves as digital input to assistive devices that change text into audio or Braille. Computers, of course, also provide access to standard office tools like Microsoft Word, Excel, and PowerPoint in addition to chemical drawing programs like ChemDraw (52), molecular modeling software, and research tools like SciFinder Scholar (53).

Most students with disabilities can use computers with only simple, inexpensive modifications to computer hardware or software. Often, simply modifying computer workstations is the only accommodation needed to assist individuals with a variety of disabilities. Many users can benefit from flexibility in the positioning of monitors, keyboards, tables, bench tops, input devices, and documentation. All students benefit from the availability of well-trained support staff and from the availability of adequate technical documentation, which should include information on accessible equipment. Whenever possible, faculty or DSS office staff should help students identify in advance any new assistive technologies necessary for specific courses. Otherwise, the student has the added burden of simultaneously learning an assistive technology while performing required coursework. Chemistry teachers are not expected to be experts in assistive technology. Nevertheless, they may be able to advise the student and the DSS office in selecting the most appropriate accommodations for specific chemistry course needs. A student cannot be expected to, for instance, select assistive devices for titration experiments before he or she has learned about titrations. For complex laboratory or classroom exercises, a lack of advance notice can be a significant competitive disadvantage. Students may need to experiment with different combinations of hardware and software before identifying the most helpful solutions. Faculty can assist in the evaluation and purchase of appropriate products by examining their compatibility, intuitive design, flexibility, ease of use, cost, warranty and maintenance agreements, and vendor support levels.

Assistive technology, accessible computing, and students with limited mobility

The standard computer mouse and keyboard can be major obstacles for students with limited arm or hand mobility. Fortunately, many hardware and software options for interfacing with a computer are available that work well for individuals with limited arm or hand movement.

In some instances, the options are simple and readily available. For example, accessibility may be enhanced by simply repositioning the mouse, keyboard, and monitor; using an adjustable monitor stand, keyboard platform, or different mouse pad; adding an inex-

pensive keyboard wrist support; and relocating surge suppressors and power strips so they can be easily reached by everyone. Standard cathode ray tube (CRT) monitors, especially those larger than 17 inches, have a large desktop footprint. Replacing the CRT with a flat panel display frees substantial amounts of desktop space. The reclaimed space provides space for better support for wrists and hands and a larger area for books, journals, and other work materials.

Control panel

Many features of the standard computer mouse and keyboard also can be adjusted and made more user-friendly through simple reconfigurations of computer software. In computers with Windows operating systems, the mouse click rate and other functions can be changed using the control panel. Click on the Windows Start button, select Settings, then Control Panel, and then Mouse. Students with disabilities should experiment with a variety of new settings in seeking the mouse features that work best for them. The control panel is also the gateway for adjusting the keyboard. Students who inadvertently touch keys, producing a string of repeated characters, may find it possible to eliminate the problem by adjusting the character repeat feature. To make this modification, follow the same route to the Control Panel, but then select Keyboard. Other settings can generate a tone that sounds to verify that a key has been fully depressed, substitute keystrokes for mouse clicks, and make other modifications.

The computer's operating system may have a built-in package of features for individuals with disabilities that can be accessed via a single interface. In the Windows operating systems, these can be found by going to the Control Panel, then selecting Accessibility Options. The options include adjustments that can substitute sounds for displayed messages or captions for sounds, settings to make the keyboard more or less sensitive to repeated keystrokes, and using the numeric keypad instead of the mouse. Indeed, able-bodied individuals often are delighted to discover Accessibility Options and use it to facilitate their own computing.

Simple features of web browsers, word processing programs, and other software also can reduce the number of keystrokes needed for common computing tasks.

Web browsers, e-mail, and word processors

The AutoComplete feature in Internet Explorer, for instance, saves previous entries made for web addresses, forms, and passwords. When the first characters of an entry are typed on subsequent occasions, AutoComplete suggests a list of possible matches. If a sug-

How do I do that?

Some hardware and software companies provide Braille, large-print, or ASCII documentation and instructions for use of their products to assist consumers with visual disabilities. However, there is a growing trend to include minimal written documentation—or none at all—with newly marketed hardware and software. Many companies are directing consumers to Help, Frequently Asked Questions, and other technical support pages on web sites. The material's usefulness, of course, depends on the accessibility of the web site, the amount of navigating necessary to reach desired information, and other factors.

Campus computing facilities can assist students with visual disabilities by providing support materials in electronic format, large print, raised print, and Braille. Help desks and network administrators can work with the campus DSS office in identifying and filling the need for these materials.

In the laboratory, instruction sheets for instrumentation, as well as signs and labels on instruments, should be as accessible to students with vision disabilities as they are to those with perfect eyesight.

gestion matches the desired entry, it can be inserted with a single mouse click. If AutoComplete is not active, it can be turned on by accessing Tools on the Internet Explorer toolbar, selecting Internet Options, clicking on the Advanced tab, and selecting Use Autocomplete. Netscape also allows automatic completion of web addresses that are still in the cache. To keep these available, set the history to be kept as long as possible.

In word processing programs, autocomplete, autocorrect, and macros can save many keystrokes. Abbreviations for long or difficult-to-type words can be added to the autocorrect or autocomplete lists.

A macro is a series of instructions that are grouped together as a single command to accomplish a task automatically. Macros reduce the need for performing time-consuming, repetitive actions. These include routine editing, formatting, and inserting tabular material with a specific size, border dimension, and number of rows and columns. With a macro, a task can be done with a single custom command. Check the word processing program's Help feature for instructions on recording and running macros.

Many e-mail programs have an Insert Signature feature that can save keystrokes and mouse clicks usually needed to add name and contact information to the end of an e-mail. It also can be used to insert boilerplate text, which consists of blocks of text that an individual may use in many or all e-mail messages. In Outlook and Outlook Express, for instance, the signature feature can be set up by clicking on Tools in the toolbar, and then on Options, and the Signatures tab. In Netscape, similar functions are found in Preferences under the Edit menu. The college computer network help desk or network administrator can assist in the use of these and other timesavers.

Input alternatives to keyboard and mouse

Individuals who have little or no use of their hands, reduced fine motor control, a limited range of motion of the hands or fingers, or who press keys with head-sticks or other pointing devices may benefit from alternatives that include the following:

- Expanded keyboards, which have larger keys spaced farther apart.
- Mini-keyboards that minimize the range of motion needed to reach keys.
- Keyboards designed for use by only the right or left hand or keyboards with a reduced number of keys that are used in combination by the fingers of one hand.
- Keyboards that can be programmed for a variety of uses, with corresponding overlays labeling each key or touch area.
- Keyboard guards (solid templates with holes over each key to assist precise selection), which those who lack fine motor control can use. These devices also assist individuals who keyboard with a finger, a mouth-stick or head-stick, or some other pointing device.
- Standard mouse alternatives, such as touchpads or trackballs in a variety of sizes and configurations, infrared pointing devices, and software reconfigurations that allow keyboard equivalents of mouse actions (or replace mouse movements or clicks with keyboard strokes).
- Disk guides that can assist with inserting and removing disks or CD-ROMs.

Non-manual alternatives

For students with more severe arm or hand mobility impairments, scanning and Morse code inputs are available. Special switches in these devices use muscle groups over which the individual has voluntary control, so the student can input data with head, finger, knee, or mouth. In scanning input, a light or cursor scans letters and symbols displayed on the screen or an external device. The user makes selections by activating a switch. In Morse code input systems, users input Morse code by activating special switches. For example, a sip-and-puff switch registers a dot with a sip and a dash with a puff.

Several different head- and mouth-operated mouse and keyboard emulation systems are commercially available, including HeadMaster or Jouse (54) and HeadMouse or Dynasight (55). To emulate keyboard, cursor, and mouse functions, these input devices can be combined with software like WiVik (56) and SCI Solutions (57). With these assistive technologies, some students with disabilities can use software like MathType (58) and ChemDraw (52), to input formulas and chemical structures.

Speech-recognition software

Speech-recognition software like Dragon NaturallySpeaking (59) and IBM's ViaVoice (60) allow individuals to input commands and data with ordinary speech. These programs must first be "trained" to recognize each user's voice. That usually involves multiple sessions of reading selected words and text passages into a microphone connected to the computer. Unfortunately, voice recognition software is only effective for a limited number of software applications. Accuracy varies with the user's skill and the individual program, so that some editing of a dictated document usually is necessary. Software vendors are developing specialized editions of voice recognition programs for specific users. The special editions available by publication date of this book included those for medical personnel, public safety professionals, and lawyers.

Assistive technology, accessible computing, and students who are blind or vision-impaired

Students with vision impairments will learn chemistry in the classroom and laboratory best and enjoy the most productive careers when they have access to the proper combinations of computer hardware and software and other assistive technology (61). No vision impairment, including total blindness, should be a barrier to that process. Chemists who are blind use assorted assistive technology to work productively and safely in academia and industry (4).

Many adaptations are simple and readily available. Anti-glare screens can make monitors easier to read. Software reconfigurations or special software can reverse images on computer screens

Student uses a closed-circuit TV to read a timer.

BEST COPY AVAILABLE

from the conventional black on white to white on black (or other combinations) for individuals who are light-sensitive. Many of the accessibility features in computer operating systems and other programs (described in a previous section on students with hand and arm mobility limitations) also are useful for those with vision disabilities. In the Windows operating systems, for instance, Accessibility Options (which can be found on the Control Panel screen) includes several adjustments that can make computing more accessible for individuals with vision impairments. Voice output can be used to read text on the screen to users who are blind. Refreshable Braille displays provide word-by-word translation of text on the screen into Braille on a separate display. The display reproduces words in the format of vertical pins that raise and lower to form Braille characters in real time as the text is scanned. Braille embossers can provide hard copy output.

Graphics like organic chemical structures and bar and line graphs can be printed in raised dots or Braille (18). Scanners with compatible OCR software can be used to read printed materials and store them electronically on computers, where they can be read using voice synthesis or converted into large print or Braille. Such systems provide independent access to abstracts, journals, syllabi, and homework assignments. There were, however, limitations in OCR software available as of the publication date of this book. They should be considered when selecting an application; for example:

- many OCR reading machine packages do not currently allow users to scan and convert technical information like chemical and mathematical equations into speech;
- these packages also are not capable of providing verbal descriptions of pictures and other graphical information; and
- they cannot convert handwritten materials.

Keeping current with newly published research once was a major problem for students with vision impairments. In the past, scientific journals were immediately available only in print format. That barrier has been significantly reduced with the immediate online availability of journals in electronic formats like HTML and PDF files, which can be read by screen output programs. However, current screen reader software may share some of the same deficiencies as OCR software (discussed above). Complex graphics and some other sections of online material may still require a human reader to be fully accessible to individuals with visual disabilities.

Students with visual disabilities often use assistive technology that includes the following:

Braille print output. Index Braille Embosser (Access Systems

International) prints PC output in Braille. Duxbury allows the computer to translate text into Braille format and send it to the Braille embosser (62).

Braille screen output. ALVA Delphi Multimedia Braille Display provides a tactile Braille display of a personal computer screen (63).

Keyboard aids. Keys can be enlarged using large-print keytop labels and the physical locations of home rows and important keys can be indicated using home-row key indicators (64).

Printed text enlargement. Printed text can be magnified with Closed Circuit Television (65), Human Ware (66), or the Clarity AF system (67).

Screen enlargement. Large monitors and programs like Zoomtext Xtra (68), MAGic 2.0 (30), Supernova (69) for Windows, InLarge (63), and Close View (70) for Macintosh display enlarged output on a personal computer screen.

Screen readers. OutSPOKEN Screen Reader for Macintosh (63), JAWS for Windows 3.0 (30), and Supernova (69) for Windows allow users who are vision-impaired to navigate a graphical interface using voice output and sound cues. Homepage (IBM) is specifically designed for reading web pages.

Speech input. NaturallySpeaking Professional (59) and "middleware" like Jawbone (71) allow Dragon speech input software and JAWS for Windows speech output software to work well together. Via Voice is compatible with most Windows applications.

New technology is developed constantly, and students who are blind or have low vision will benefit from keeping up-to-date with the advances.

Assistive technology, accessible computing, and students who are deaf or hearing-impaired

Fax, e-mail and the World Wide Web have become especially important forms of assistive technology for individuals with hearing impairments. These, of course, are non-oral forms of communication that have been widely embraced by the world at large. E-mail alone has substantially reduced use of the telephone for communicating. Indeed, individuals in offices and dormitory rooms separated by only a few yards often choose e-mail over in-person oral communication. E-mail and other computer-based communication methods, including Internet text chat and instant messaging, have thus become an inexpensive and widely available link between individuals with hearing impairments and the rest of the world.

Teachers should be aware, however, that these newer technologies have not replaced traditional telecommunication aids, such as TTY terminals. The TTY is a text telephone, given that acronym because it originated in technology used for teletype machines. TTYs are the

primary tool for telephone conversations for individuals who are deaf and for some who are hearing-impaired. Their use requires that both parties in the conversation have a TTY terminal. When only one party has a TTY terminal, telephone conversations can be carried out through the telecommunications relay service (TRS).

Available without charge throughout the United States, the TRS provides a bridge between people who communicate by voice only and those who communicate by TTY. TRS allows real-time conversation in which a trained communication assistant speaks the words typed by a TTY user and types the words spoken by a voice telephone user. Personal computers can call and communicate with a TTY terminal. A special modem may be required because computers encode communications in ASCII format, while TTYs use Baudot code. A standard Hayes-compatible modem can be used, however, if the TTY can receive 300 baud ASCII.

People who are deaf or hearing-impaired continue to use the fax. Faxes may be used for material that does not require two-way interaction; for brief messages when e-mail is unavailable; or for communicating with individuals not accustomed to using TRS, Internet instant messaging, and other approaches.

Although individuals who are hearing-impaired face relatively minor barriers to computer usage, some software packages provide useful visual alternatives to audio output. For example, when the sound level is set to zero on a Macintosh, visual cues are provided as an alternative to sound cues. Similarly, the accessibility features in Windows operating systems include a Show Sounds option. When activated, it makes the screen blink or displays a small musical note on the monitor whenever the computer generates a system sound, such as when e-mail arrives.

Adaptations of speech-recognition technology promise to provide real-time, speech-to-text transcription as a support service for students who are deaf or hearing-impaired. Such a system should be easy to use and require little training, so that interpreters, teacher's aides, note takers, and others can produce text almost as quickly as a classroom teacher speaks (72).

Assistive technology, accessible computing, and students with learning disabilities or ADHD

Students with learning disabilities can benefit in a variety of ways from computers in the classroom and laboratory. Those with difficulty processing written information, for instance, may use spell checkers, thesauruses, grammar checkers, and word prediction programs to complete assignments and tutorials. Word prediction programs such as Co:Writer 2 (73) and Telepathic (74) predict whole

Student safety

Many years of experience in academic and industry laboratories illustrate that a person with disabilities can work safely in the laboratory. However, it still may be a source of concern for some teachers, counselors, and parents. Studies conclude that there is no increased safety concern for individuals with disabilities. Numerous publications have focused on the topic (94, 105). In addition, industry surveys support that conclusion. For instance, Equal to the Task, a study of 1400 employees with disabilities at DuPont, concluded: "DuPont's experience has proven that disabled workers are safe workers" (103). More recent results of DuPont's study are available (104). Personal experiences of the reviewers and contributing authors of this book confirm those observations. Information on chemical safety can be obtained from ACS Committee on Chemical Safety resources and other sources (94).

The best safety measures focus on prevention of accidents, planning to mitigate the consequences of accidents, and drills to practice the plan. In the unlikely event that an emergency does occur, faculty and staff should be ready to direct an evacuation from their respective work areas. That requires familiarity with primary and alternate routes of evacuation. During fire drills, the instructor should practice evacuation of students with disabilities involving vision or mobility. Drills should be done under conditions likely to prevail during an actual emergency, when elevators and mechanical doors may be unusable or inoperable.

In order to prepare for an emergency, instructors should be aware of students who may need assistance in evacuating the lab. DSS personnel, teachers, or counselors should inform the instructor when such students are in the class. Ask the student what assistance will be needed for evacuation and if the class is evacuated for an extended time. Instructors involved in planning new lab facilities should recommend construction of robust "safe refuge areas." These are special fire-safe structures where students who are unable to leave the building can take refuge until rescuers arrive. Such areas can benefit both those with and without disabilities in fires, explosions, or natural disasters (see Chapter 7 on universal design).

During an emergency, instructors should follow the specific evacuation plan developed by their own institution for the individual laboratory or building, which will often involve the following:

- Remind students to avoid reliance on elevators, which may be inoperable or unsafe.
- Remind students about the locations rescue personnel will check for people needing evacuation assistance.
- Guide individuals with disabilities who need assistance to the nearest exit from the building. If the individual with disabilities cannot exit the building, he or she should be guided to a predesignated area of refuge and rescue (usually on a staircase landing).
- Leave the building and tell emergency personnel the location of students, including individuals with disabilities, who need evacuation assistance.
- Other instructions issued at the time of an emergency may supplement or replace procedures in the written plan.

words from fragments. Macros, autocorrection, and keyboards with programmable keys can reduce the necessity of remembering keyboard commands and simplify entry of commonly used text.

Computer features such as outputting text in voice format and displaying text in large fonts can compensate for visual and reading difficulties for some students. These individuals may benefit from many other computer technologies used by students with visual disabilities, including speech synthesizer software, programs that

magnify screen content, and extra-large fonts. Tapes and diskettes available from the Recording for the Blind & Dyslexic (16), the Texas Text Exchange, or the National Library Service and closed-captioned television and videotapes also help students with learning disabilities.

Other software that can help improve reading, writing, organizational, and other skills includes

- Kurzweil 3000, which underlines monitor text and produces simultaneous voice output (75).
- OmniPage, an OCR program that combines three OCR technologies with capabilities like voice readback of OCR text and automatic checking for character-recognition errors.
- Inspiration, a visual learning tool that inspires students to develop ideas and organize thinking by creating diagrams, concept maps, outlines, and graphical organizers (76).
- Intellitalk, a simple talking word processor that can read letters, words, or sentences (77); TextHELP! (78); and a variety of other text-to-speech utilities speak highlighted blocks of text.

Some students with learning disabilities may have trouble sequencing, or performing tasks in a specific sequence. They will benefit from step-by-step lists of procedures for carrying out computing tasks. Simple printed instruction sheets, or more elaborate plastic laminated instruction cards, can be kept available at computer workstations. Those without learning disabilities often find written instructions helpful also, especially for seldom-used programs.

Chapter 5.
IN THE LABORATORY

Laboratory experience, a fundamental part of many scientific disciplines, is especially important for experimental sciences like chemistry. Most students with disabilities can work safely and effectively in the laboratory, using accommodations similar to those provided in the classroom. Scientists with severe disabilities, including total blindness, have verified that fact through long careers that involve teaching and working in academic and industry research laboratories. Some disabilities, however, may restrict a student's laboratory activities. The level of participation should be determined on an individual basis. It is important to remember that very restricted laboratory use does not necessarily preclude a productive scientific career. Automation and new technologies continue to reduce the need for physical manipulations. Students gain an appreciation of chemistry from lab experience that is vital to many careers in science and medicine. That experience also can be valuable in nontraditional chemistry careers that do not involve laboratory activity. Many successful chemists and other scientists—with and without disabilities—direct experimental programs without performing laboratory manipulations themselves. Indeed, senior scientists in academia and industry rarely set up apparatus or do other bench-side work. Other chemists with disabilities work in academic and industry laboratories with few or no accommodations. Please refer to Chapter 2 for additional relevant information.

General laboratory considerations

Certain considerations apply to all students with disabilities. Before the first laboratory session, the teacher should meet with the student, laboratory instructors, and others who will be involved in lab sessions. The conference, which may be held in the lab, is an ideal forum to discuss physical accessibility of lab facilities, accommodations, and procedures. It should also establish a mechanism to ensure that all parties communicate regularly during the academic term.

Some lab courses require that students work in pairs or groups. In these cases, the instructor should offer to help place the student with a congenial lab partner or group and check occasionally to be sure the arrangement is working well. The best lab partner probably will be an above-average student, who can spend time doing the extra physical tasks and still finish his or her own experiments successfully. If a student has a visual or communication disability, a lab partner with strong verbal skills may be best at relaying instructions and other important class information. However, the

BEST COPY AVAILABLE

arrangement should be equitable for all students. When the student with disabilities needs extensive assistance, it may be more effective to employ a full-time laboratory assistant. The assistant may be a more senior student who has taken the course previously.

The student may need extra time to complete lab assignments, and the teacher can consider several options. For instance, the student might begin the regular section earlier and stay later or complete the work during another scheduled laboratory section. The student and teacher should agree on the amount of extra time that is reasonable, in accordance with DSS office recommendations.

Simple steps can help ensure safe participation of students with disabilities in the laboratory. Teachers, for instance, should encourage the student to visit the lab before the first session, noting location of exits, showers, extinguishers, and other safety equipment. That advance knowledge will encourage the student to participate more effectively in the safety-orientation program. Teachers also should discuss and address laboratory-specific needs. Clear paths to exits are always recommended, and vigilance about this is essential if a wheelchair or student with a visual disability must pass through. Determine whether the student can read labels on reagent bottles and instrumentation. Students with learning disabilities or ADHD may have difficulty doing so, as well as students with visual disabilities. These students may benefit from labels printed in larger fonts, Braille, or raised-letter type. Work with each student to determine whether certain operations may be too risky to perform without assistance. Strongly encourage all students, including those with vision disabilities or poor manual coordination, to wear protective gloves when working with chemicals. Students with some disabilities may prefer lightweight, disposable gloves, which make it easier to grasp objects and manipulate equipment. For more discussion about choosing gloves, see the ACS booklet, *Safety in Academic Chemistry Laboratories.*

Architectural modifications

Other accommodations, including physical modifications to the lab, might be necessary. They are discussed briefly below, categorized by specific disability. An excellent source of additional information about laboratory resources, techniques, and accessible chemistry laboratory experiments is Barrier Free Education (79). Modifications may require ingenuity on the part of the small school or department with limited resources (80). There may be aspects of a given laboratory exercise that the student is unable to perform because of physical or safety considerations. Such situations probably will be rare and certainly should not prevent overall student participation in the laboratory. Students and faculty should

Figure 2. Lavatory clearances

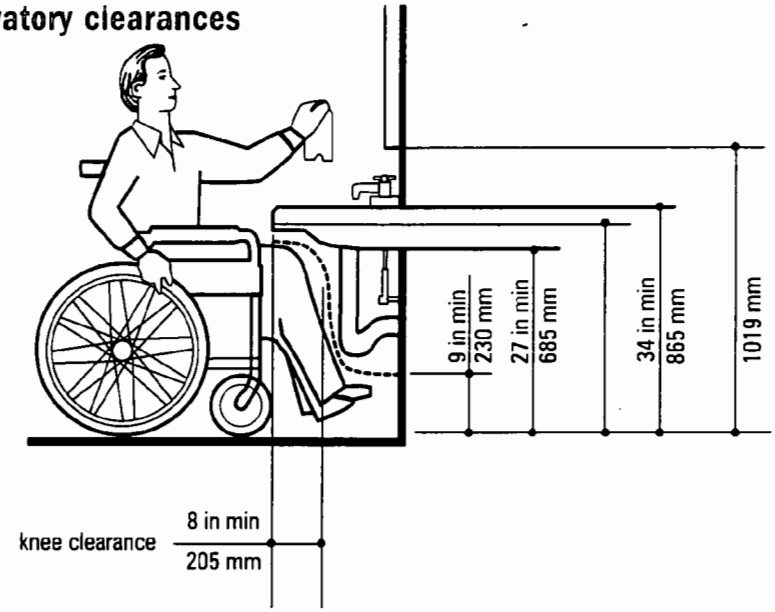

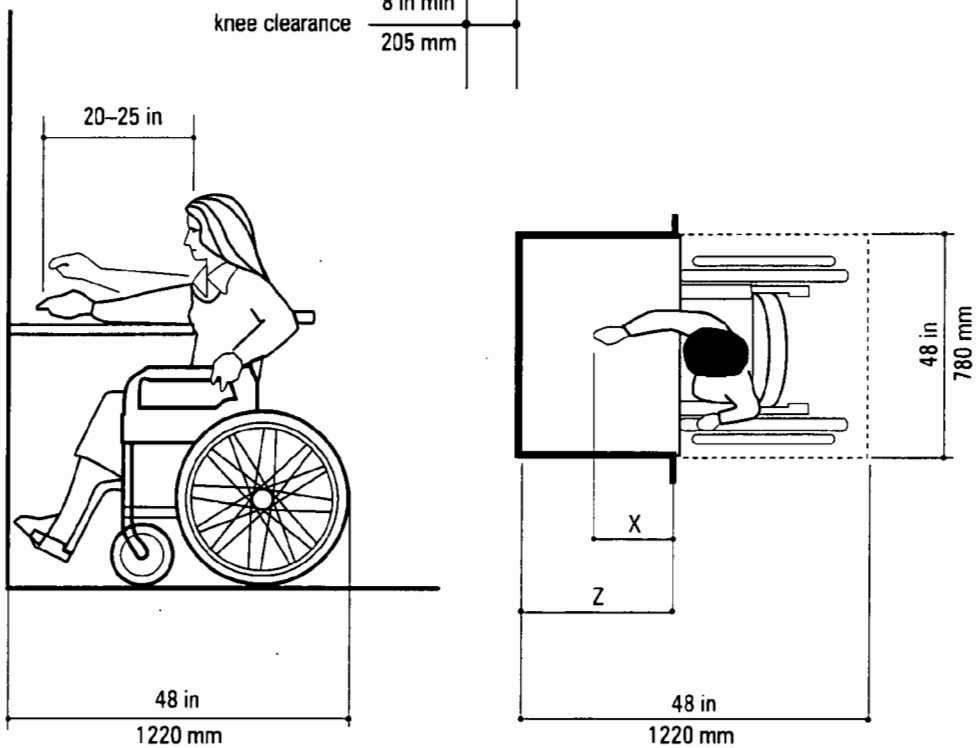

Figure 3. Maximum forward reach over an obstruction

work together on a solution for that one aspect of that one experiment, rather than scrapping the entire experiment.

Students should take an active role in ensuring that their needs will be met in the laboratory. If the instructor does not hold a conference before the first lab session, as suggested above, the student should request one. The student should visit the lab to make sure the area is accessible, learn about laboratory exercises beforehand, help faculty identify necessary accommodations, and help identify ways to fully participate.

BEST COPY AVAILABLE

Directed laboratory assistants

A directed laboratory assistant is an individual who performs the physical manipulations of an experiment under the student's direction. Directed laboratory assistants provide physical assistance in completing laboratory assignments. They should not prompt, give hints, or otherwise interfere in the student's learning experience. The student should direct the experiment, observe data acquisition, and interpret the data. The assistant may be needed to manipulate instruments, equipment, or materials. For example, a student who is unable to use his or her hands because of a disability could direct a laboratory assistant in the following ways: The student tells the assistant to open a designated reagent bottle and pour an amount into a graduated cylinder. The student directs the assistant to pour some out or add more, with the student deciding when the meniscus is at the correct level. Then, the student tells the assistant into which container the liquid is to be poured. The student also tells the assistant when and how much the reagents should be heated, whether to stir and with what, and so on. Directed laboratory assistants may also assemble and disassemble apparatus as directed by the student and perform other physical tasks not possible for the student with disabilities. This approach is much the same regardless of the student's disability.

Instructors should clearly establish the role of the assistant, and the relationship between student and assistant, before the first lab session. The student does the thinking and directs the assistant but should be as independent as possible. The assistant should do exactly as the student directs, unless it would be unsafe. The instructor should confirm that the assistant fulfills this role properly. When questions arise, the student and instructor should confer directly, not through the assistant.

The assistant should be an individual who has already taken the course, rather than a student currently doing so. He or she should be familiar with the equipment and terminology. Students with a vision impairment should be given an opportunity before or during the lab session to feel and visualize how the equipment is set up. In some cases, such as allergies or some other sensitivity, the student may direct the assistant remotely. This can be done by a closed-circuit television link, a web camera on networked computers, or other ways that allow the student to view the experiment from a different room and communicate with the assistant.

Use of a lab assistant should never affect the student's grade.

Students with limited mobility in the laboratory

Physical or architectural accessibility is the key issue in ensuring an effective laboratory experience for students with limited mobility. It

starts outside the laboratory building. A wheelchair rider, for instance, must be able to approach and enter the building. Once inside, there must be an elevator to the laboratory. The student must be able to enter the laboratory door; navigate the aisles; and use lab benches, fume hoods, and other equipment. Emergency exits, showers, other emergency equipment, and general facilities in the lab building such as restrooms and telephones must be accessible. Ultimately, students with limited mobility need adequate space to move freely. Wheelchair users need wide, clear aisles and adequate turning space to permit maneuverability and easy access to materials and equipment.

Fortunately, most academic institutions have complied with federal laws that require elimination of physical barriers to persons with disabilities. The person with limited mobility should now be able to use any laboratory in any building. Newer laboratories, built on the principles of universal design—with equipment and space easily reconfigured to meet the needs of all students and faculty (see Chapter 7 on universal design)—should be fully accessible. Many older laboratories have accommodated students with disabilities in the past and may require only minimal modifications.

The laboratory can be made generally more accessible with a few modifications. Every teaching laboratory should have at least one wheelchair-friendly workbench. Positioning a wheelchair parallel to the lab bench or fume hood is a poor alternative. The parallel position is generally restrictive and makes it difficult to perform many common laboratory tasks. Some students, however, do prefer working this way. Ideally, a workbench should have an opening underneath so that a wheelchair-using student can be closer to the work surface. It is important to realize that there is no "standard" wheelchair. Students use many different types of wheelchairs, including manually powered and electrically driven. They have different dimensions. Some students ride electric scooters. WheelchairNet is one among a number of valuable Internet resources on wheelchair types and dimensions (81).

To accommodate modern wheelchairs, work surfaces should be adjustable (Figure 2). ADA recommendations on depths and other dimensions are based on the most common wheelchair designs and do not apply to all models. Flexibility in the initial design of work areas will ensure that the laboratory will be usable by students with a variety of disabilities. That effective design includes providing tables and sinks with easily adjustable height and flexible placement of utilities.

Basic requirements

Complete ADA Accessibility Guidelines were first published in 1991 and have been revised several times (82). The detailed guide-

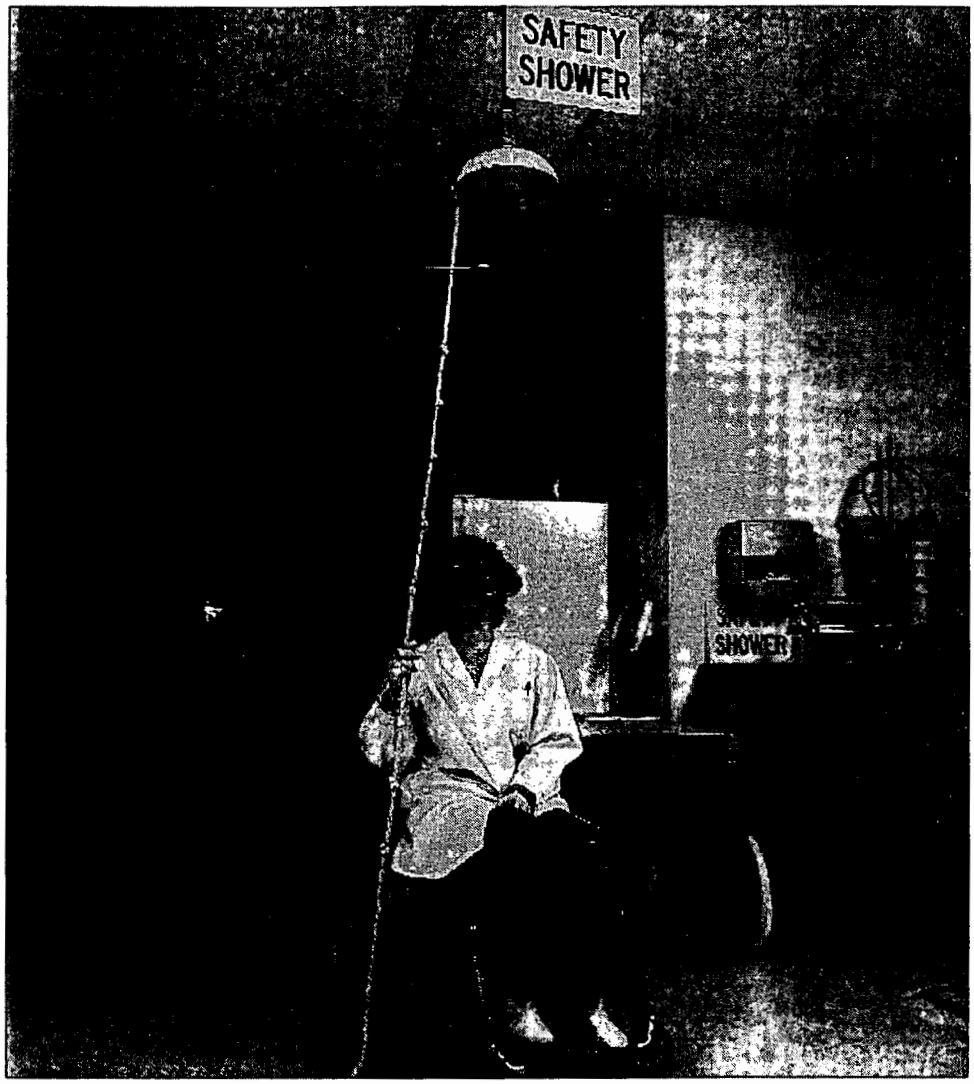

lines with diagrams and other graphics can be downloaded from the Architectural and Transportation Barriers Compliance Board, an independent federal agency devoted to increasing access for individuals with disabilities and widely known as the Access Board. The Board's web site is an excellent source of additional information (83).

The Access Board's guidelines should be regarded as the most current and comprehensive and should be consulted before making architectural changes in a laboratory. However, the basic accessibility and safety requirements for laboratories used by individuals in wheelchairs include the following:

Aisles. Aisles must be at least 48 inches wide and clear of obstructions to allow sufficient room to maneuver a wheelchair. Where aisles are too narrow, a lab station can be set up at the end of the bench or a portable station can be positioned in an accessible area. A student with limited mobility should be assigned to a lab station on an outside aisle, close to an accessible exit, whenever possible.

BEST COPY AVAILABLE

For the laboratory practicum

Students with disabilities generally need access to the same accommodations during classroom testing, regular laboratory sessions, and lab practicums. Volunteer or paid lab assistants, for instance, can function in the same capacity without providing direct assistance in answering examination questions. Assistive technology that interfaces with lab instruments, computers, and other devices should also be available for students during examinations. Likewise, students who require extra time to complete regular experiments should have extra time for practicums. Instructors can use the same arrangements that have been successful during regular labs, such as allowing the student to begin earlier, work later, or complete the practicum in another section of the same lab.

Likewise, procedures used during classroom testing also can serve as models for the practicum. For instance, students given tests in alternative formats—such as Braille, large print, or audiotape—should have practicum materials in the same format. The overall goal should be the same as in classroom testing, so that the practicum fairly evaluates the student's knowledge of the subject material, independent of variables like physical strength, visual acuity, or mobility.

Each aisle must have two exits, each with a turning radius of at least 60 inches.

Aprons. When working with chemicals, all students should wear plastic or rubber aprons to protect their clothing. Students who use wheelchairs, or those who have no sensory perception in the lower body, should be advised of the importance of properly protecting their laps while working with chemicals.

Drawers. Drawers should be equipped with handles, not pull knobs, and designed so they can be opened with a stick.

Eyewash stations. They must be located along an accessible aisle. Eyewash stations should be easily accessible to the wheelchair user. The American National Standards Institute requires that eye and face wash units and emergency showers be reachable within 10 seconds (84), which means that the workstation should be within a few meters of these safety installations.

Face shields. A seated student's face may be at the same level as an experiment. A full-face shield may be warranted for certain experiments where safety glasses alone would not provide adequate protection.

Fire extinguishers. Lightweight fire extinguishers should be accessible to students with limited strength or mobility. All students should be instructed in fire drill procedures and the use and limitations of fire extinguishers.

Fume hoods. An accessible fume hood must be available when the student with disabilities is doing experiments that require a hood. Adjustable-height fume hoods are available and allow all students to work at a comfortable height. Ideally, the fume hood should be designed so that the student in a wheelchair can approach and use it in a head-on position. Walk-in hoods, if available, may be useful

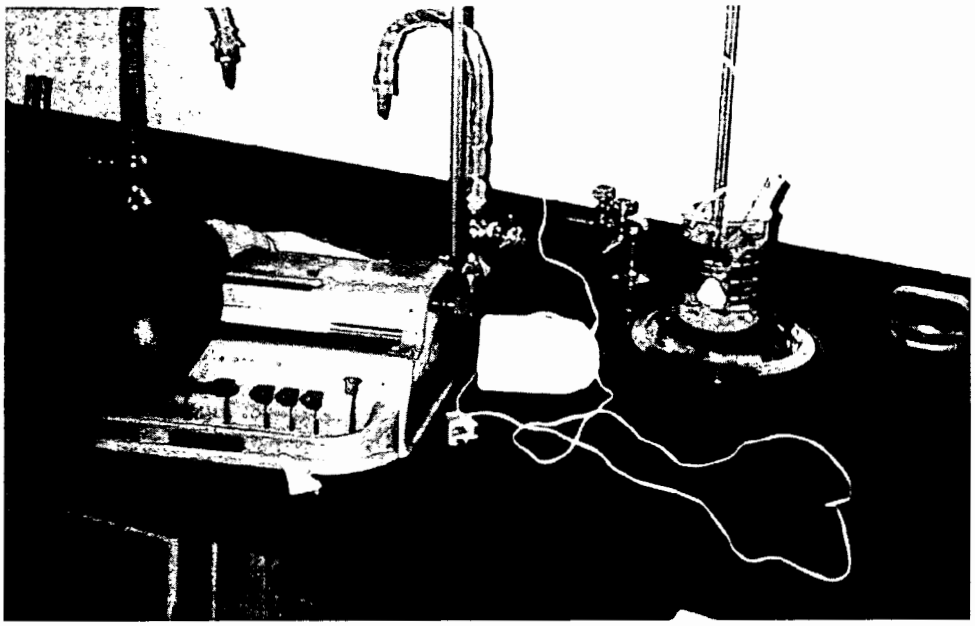

On the left is a Brailler, which is used to take notes in Braille. Next to the Brailler is a talking thermometer. Smaller electronic Braille note takers and computer-interfaced thermometers are also in use.

for some students who use wheelchairs. The student can sit at a portable table of appropriate height placed inside the hood.

Retractable drench hose. This device may serve as a useful adaptation; it resembles the spray hose on a kitchen sink, can be installed on a lab sink, and serves as both an eyewash and a safety shower. The drench hose should deliver a low-impact water spray that avoids mechanical injury to the eyes. If a retractable drench hose is installed, a typical safety shower with a long pull chain, as described below, still must be available.

Safety showers. These must be located along an accessible aisle. Safety showers should have a pull-chain that reaches within 3 feet of the floor in case of the unusual event where a wheelchair user must get out of the wheelchair because of a chemical spill in the chair.

Sinks. Sinks must be readily accessible. This is often best accomplished by assigning the student with limited mobility to a workstation with or near a sink.

Transporting hazardous materials. If a student in a wheelchair carries hazardous materials for an experiment, the instructor should ensure that this is done safely. There are several options. Students can use a spill-proof, splatter-proof container secured to prevent it from slipping off a lap or tray; wear a rubberized apron that covers the body; use a small, wheeled cart to transport the materials; or have a lab assistant transport the materials to the lab station.

Utility and equipment controls. They must be within easy reach.

Valves and door hardware. They should be operable with less

BEST COPY AVAILABLE

than 5 pounds of pressure.

Workstation surfaces. The top of the work surface must be 30 inches from the floor. The bottom should have a 29-inch clearance. The depth should be at least 20 inches, and the width at least 36 inches.

Some students with disabilities may require additional time to complete lab assignments. Laboratory exercises that minimize the need for students to move from location to location can facilitate the progress of all students, especially those with disabilities. Likewise, microscale experiments can be of benefit to all students by minimizing the risk of chemical exposure, reducing the volume of wastes, and lowering the costs of chemicals and waste disposal.

Advance requirements

Both undergraduate and graduate students involved in active research programs may require other modifications. These, however, need not necessarily be elaborate or expensive. Often, simple modifications of workspaces or adaptive equipment can suffice. One chemist who uses a wheelchair performs some experiments on a standard vacuum rack. This 22-inch-high, 12-inch-deep workspace provides the vertical access required by a seated individual for doing titrations, distillations, and column chromatography (85). However, this workspace is not suitable for operations that require a fume hood. A biochemist who has short stature uses a simple wood step-up platform, constructed at minimal cost by university maintenance personnel (4).

Nonmagnetic wheelchairs and easily fabricated sample handling devices can be used in nuclear magnetic resonance spectrometer facilities, where high-field magnets preclude the presence of magnetic objects (86). Iron-containing bolts and other magnetic parts in aluminum or composite wheelchairs can easily be replaced with off-the-shelf stainless bolts. Alternatively, other students can assist wheelchair-users by loading samples for NMR analysis. For wheelchair-using students involved in materials, chemical electronics, and nanotechnology research, wheelchairs can be adapted for use in clean rooms. Supplemental funding is available for such adaptive equipment in research grants from most major funding agencies (87, 88).

Meeting specific needs

In the instructional laboratory, accommodations can easily be developed for specific laboratory operations. One example involves experiments with a burette. If no suitably low work surface is available for reading the burette at eye level, the instructor can help the

student develop a mathematical correction to adjust for reading the burette in a sitting position. When the burette top is beyond the reach of the wheelchair user, fellow students can help by adding reagents. Placing the burette in a tray in the bottom of a lab sink with the drain plugged may lower the apparatus enough for a seated student. Likewise, the student in a wheelchair can use alternative techniques for experiments involving classic column chromatography. A centrifugal chromatography system (e.g., a chromatotron or cyclograph) can be used if the desired compound has a chromophore. Flash cartridge chromatography systems (such as those manufactured by Biotage) may provide another suitable alternative.

These technologies are standard in most industrial laboratories, and bringing them into the instructional or academic research laboratory will enhance the educational experience for all students, with and without disabilities. Instructors should focus on the goal of the experiment, which may be purification of a chemical compound, not the manner in which it is achieved. Many alternative routes to the goal may be more suitable for a wheelchair rider.

It should be noted that laboratory automation, such as the use of robots, is becoming commonplace in both academic and industrial settings. It results in greater speed, efficiency, and capacity. The application of laboratory automation tools can enhance the productivity of students with limited mobility, and in some cases even remove the need for accommodation.

These approaches to making a laboratory more accessible have been used successfully by various scientists with disabilities. More options will become available as technology improves. For example, some students will benefit from innovations in standing chairs or adjustable-height wheelchairs, which are now on the market (89–91; for a detailed list of manufacturers, see 92). An assortment of new equipment that promotes independent living in the home has become available in recent years (92, 93). This technology also may have potential applications in the laboratory, with or without modifications.

Students who are blind or vision-impaired in the laboratory

Many students with visual disabilities have successfully completed chemical laboratory work and regard the hands-on experience as a vital and enjoyable part of their education. For them, organization and consistency—such as placing all materials in a consistent location—greatly enhanced the laboratory experience. To help maintain a safe working environment, these students, like all personnel, are always required to wear safety goggles or glasses in the laboratory,

This student is using a Brailled thermometer to measure the temperature of ice water.

even when they are not doing lab work themselves (94).

Students who are blind navigate best in familiar surroundings, and they should become familiar with the entire laboratory, including seldom-visited areas. Ideally, this process should begin before the first scheduled lab session, with the lab instructor identifying lab benches, sinks, reagent shelves, hoods, safety showers, emergency exits, and other features. The instructor should identify the locations in the laboratory that pose the greatest potential hazards. This orientation session can also be used to pick the most effective workstation for the student, discuss safety rules, and outline fire drill and other procedures. The student should be given time to navigate through the laboratory several times in order to remember the location of exits, learn the bench configurations, memorize the positions of the utilities, and become familiar and comfortable with the surroundings. If the student requires a full-time laboratory assistant, the assistant should be included in the orientation.

Instructors can be assured that dog guides brought into the laboratory will not pose a safety hazard, and no restriction should be placed on the use of a dog guide in a laboratory. Dog guides are intelligent, highly trained, obedient, well-mannered animals. Students with dog guides, however, may decide against bringing them into the laboratory to avoid contact with potentially harmful materials. In such cases, the instructor should cooperate in finding a spot where the dog can wait. Dog guides are accustomed to waiting. Commonly used waiting areas include nearby offices or an out-of-the way spot in the balance room. Provide a clean mat for the dog if there is any concern about chemical residues on the floors.

BEST COPY AVAILABLE

Students with vision disabilities sometimes must observe an experiment at close range. They should always use a full-face safety shield when doing so. In some instances, it will be safer if other students, the instructor, or a lab assistant provides a verbal description of equipment setup, chemical reactions, and other aspects of an experiment.

Simple accommodations

Some students with vision impairments may require no special laboratory assistance, or only simple accommodations. Those could include larger letters on reagent bottles, a magnifying glass to read burettes, a large-size lab notebook, and a lab station in a well-lit area. Numerous other simple, low-cost accommodations can enhance these students' laboratory experiences:

- Titrations can be done with a standard pH meter, rather than a colored indicator, or can be based on mass or time measurements. Laboratory exercises that incorporate sound or smell "level the playing field" for the student with a vision disability and broaden the experience of classmates (80, 95, 96).
- Volume measurements can be done with liquid level indicators such as a flotation device (FOSS) in a graduated cylinder, volumetric pipettes, repipetters, or volumetric syringes.
- Solid reagents can be transferred using spoons with sliding covers to prevent spillage.
- Large-print or Braille thermometers or high-power magnifiers can facilitate reading the scale on thermometers.
- Reagent bottles can be labeled in large print or in Braille using a special Braille label gun. Sandpaper labels can be used for hazardous chemicals. Some laboratory glassware is available with raised numbers or with etched-glass labels.
- Triple-beam balances already have notches for larger mass denominations, and notches can be cut in the beam to mark gram and smaller mass denominations.
- A glue gun can be used to raise the balance point indicator for tactile recognition.
- Digital output from electronic balances, thermistors, voltmeters, and multimeters that can be interfaced to computers may be converted to voice synthesis. (For examples, see Barrier Free Education.)
- Bunsen burner adjustments can be based on audible cues recognizable to many students with vision disabilities.
- The dials on electric hot plates can be marked with tactile increments.
- Effervescence is audible in macroscale experiments and can be heard with a microphone and amplifier in microscale experiments.

- Properly placed staples can easily make standard meter sticks more readable. Braille rulers and meter sticks are also available.
- Scanners are now available to digitize gels and chromatograms.

"Talking" calculators and other electronic products with voice output are not only helpful to students with visual disabilities; they also can increase efficiency and decrease errors when used by those without visual disabilities.

More specialized equipment and products that facilitate laboratory work for students are constantly being developed. Excellent illustrated reviews of this special equipment, designed for use in high school laboratories, are available (97–101). Examples of equipment that can provide audible readouts include talking thermometers, and probes that emit a tone that varies with light intensity (98). A wide variety of laboratory instruments with computer interfaces provides an intermediate level of accommodation that allows students to work in the laboratory more independently, if the output is compatible with their existing assistive technology.

Students who are deaf or hearing-impaired in the laboratory

Students who are deaf or hearing-impaired generally need few accommodations in the laboratory. Among these are visual cues on equipment to supplement audible alarms, indicators, and mechanical sounds that indicate whether equipment is on or off. Many of the accommodations are simple, inexpensive, and based on common sense or creativity. For instance, the fluttering of a simple strip of filter paper or cloth attached near the opening of a fume hood would provide a clear visual clue as to whether the hood was on or off (4). Most well-designed equipment already has visual on/off status indicators, such as glowing LEDs or lights, so expensive modifications are seldom needed. Otherwise, these students have only a few special needs, which include the following.

Effective communication. Good communication includes making sure the deaf or hearing-impaired student receives and understands all verbal instructions for laboratory procedures, along with announcements and other oral communications.

Fire and other emergency alarm systems. They should also include a visual indicator, preferably with flashing lights, and should be visible from all parts of the lab.

Frequent pauses. The laboratory instructor should pause frequently during any laboratory demonstration so the student has ample time to complete multiple visual tasks. Those often include watching lab demonstrations and the interpreter while speech reading and taking notes.

Interpreters. Interpreters should sign near an instructor demonstration to minimize the need for the student to continually look back and forth between the demonstration and the interpreter. In these instances, the interpreter should wear eye protection and other appropriate protective gear.

Unobstructed views. Students with impaired hearing should have lab stations with an unobstructed view of the instructor.

Visual indicators. Some older equipment can be monitored easily by touch. For example, a mechanical timer with a metal bell produces enough vibration to be felt when it goes off. However, newer electric instruments, such as an electronic timer that beeps, cannot be detected by vibration.

For general guidance, lab instructors should follow the teaching practices explored more fully in Chapter 2. Lab instructors should remember that students who are deaf or hearing-impaired sometimes face social barriers because they cannot communicate easily with their peers. When assigning a collaborative exercise or laboratory, instructors should offer to help the student seek appropriate partners who communicate well.

Students with learning disabilities or ADHD in the laboratory

Students with learning disabilities usually need few laboratory accommodations. Indeed, some students with learning disabilities who struggle in the classroom excel in the lab. That is partly because of the lab's multimodal instruction, which combines oral presentations by the instructor, written material in the lab manual and notebook, and hands-on activities.

Nevertheless, lab accommodations may be essential for some students and may depend on the content of a specific lab exercise. For example, students with auditory processing or sequencing disorders may have difficulty following step-by-step instructions unless they are supplemented by written instructions.

Techniques that help students with learning disorders or ADHD can also benefit their peers in the lab, as in the classroom. For example, all students can benefit from laboratory exercises that are inquiry-based rather than demonstrations or activities with predetermined outcomes. Laboratory exercises thus can be revised so students must determine their own procedures to answer a given question. Removing visual distractions from the lab environment will help all students remain focused, not just those with learning disorders or ADHD.

Chapter 6.

MENTORING AND ADVOCACY: ENSURING SUCCESSFUL TRANSITIONS TO HIGHER EDUCATION AND EMPLOYMENT

Adviser. Teacher. Coach. Positive role model. Friend. Mentors are all that and much more. Many scientists looking back on the milestones in a successful career realize the essential roles that mentors played. Mentors' roles are multifaceted. Their overall impact is to encourage and sustain an interest in science and open doors to opportunities. Finding a suitable mentor may be the most critical step in a student's scientific career. Essential to the successful career of any scientist, mentoring is especially important for students with disabilities. They benefit from the typical mentoring that helps so many other students discover and develop a science career. In addition, students with disabilities need more targeted mentoring that addresses disability-specific issues.

Unfortunately, students with disabilities get less mentoring than other students (10). The reasons are complex and involve attitudinal barriers common to other underrepresented groups in science (10, 106, 107). This situation is indeed unfortunate, especially with the abundance of mentoring resources now available to students and teachers. Teachers are the key to making mentoring more available to students with disabilities. Faculty can determine whether a student with disabilities should have a mentor, explain the importance of mentoring to a career in science, and help forge mentor–student relationships. In some instances, the student with disabilities may wish to suggest the name of a faculty member or other individual who could serve as a mentor. In other instances, the teacher may suggest a mentor from academe or industry and help with the initial contact.

Some students with disabilities may relate best to a mentor who also has a disability and can serve as a specific role model. The American Association for the Advancement of Science's *Resource Directory of Scientists and Engineers with Disabilities* is a useful source. Remember that long-distance mentoring relationships, with routine contact by e-mail or telephone, can work effectively. There is no specific requirement, however, for the mentor to be an individual with disabilities.

Proving abilities

Mentors and teachers should place special emphasis on encouraging students with disabilities to participate in programs that demonstrate the student's abilities. In today's competitive job market, it is

BEST COPY AVAILABLE

essential that students have skills and work experiences that catch the recruiter's attention and distinguish them from other applicants. In general, mentors should encourage students with disabilities to participate in as many activities as possible. These activities will build scientific and interpersonal skills and become impressive additions to a résumé. Specifically, students with disabilities should be encouraged to participate in internships, work-study programs, and other activities that involve real-world work experiences in a laboratory or other setting.

Such participation is important for all students and is especially valuable for students with disabilities. It will help demonstrate to sometimes skeptical recruiters that the student can, in fact, work effectively despite a disability. A student with real-world work experience can anticipate the recruiter's unasked questions and focus the job interview beyond any unstated doubts about ability. The student might say: "You may wonder how a wheel-chair rider can just get to work on time, let alone handle this kind of job. Well, I worked for two summers in the analytical lab at Smith Industries, and another at Jones Chemical. Let me tell you how I did it there." Instructors and mentors in high school and college can help pave the road to future careers by seeking out new work-based experiences, informing students about existing opportunities, encouraging them to participate, writing recommendations, and giving personal references.

Mentoring students with disabilities

Mentoring a student with disabilities is similar to mentoring other students. Mentors and teachers should be aware that students with disabilities might have low self-esteem and lower-than-justified expectations. Out-of-classroom activities give students an opportunity to identify, demonstrate, and document their unique skills. Some of their strengths typically include problem-solving abilities, perseverance, knowledge of negotiation strategies, and consensus building. Mentors and teachers should encourage students with disabilities to participate in out-of-classroom activities, including

- membership in scientific societies, such as the ACS Student Affiliates program;
- work-based learning opportunities;
- summer internships or other work experiences;
- undergraduate research projects;
- campus organizations or interest groups that address the needs of students with disabilities; and
- presentation of research results at scientific conferences.

Participation in outside activities also helps build networking

skills. Networks that include scientists with disabilities can be especially important for students. Students often need information on specific kinds of accommodations that might be required in advanced courses, internships, or future employment. Scientists with disabilities who have gone the same route often can provide information and reassurance.

It is important to recognize that opportunities for capable students can be extended beyond the local setting, through mentoring and internship programs like DO-IT (50) and RASEM (The Regional Alliance of Science, Engineering, and Mathematics). Teachers can seek out opportunities for students through contacts with local businesses, colleges, universities, and government agencies. Helping students take advantage of these newly created resources can dramatically improve an Individualized Education Program (IEP) and be life-changing for students and teachers alike.

For many students with disabilities, achieving an active career in science requires access not only to the classroom and the laboratory but also to resources that help mitigate challenges posed by their respective disabilities. Faculty can encourage science careers among students with disabilities by educating students about the resources available and helping them use these resources to their best advantage. Proactively, they can encourage the enrollment of students with disabilities in their classes and can assist these students in progressing through more advanced levels of education in science.

This chapter describes ways in which faculty can collaborate with students at the various levels of their education and ensure that they successfully make the transition to the next stage of their education. In this way, students with disabilities learn ways to become progressively more responsible advocates for their own accommodations and resources.

High school

Decisions that determine the practicability of a career in science often are made in the high school or middle school years. Unfortunately, some students foreclose the option of a science career early, by virtue of the middle school and high school courses they choose. Students usually must take a sequence of appropriate courses for admission to college and specific science and mathematics courses for admission into a college science major. The high school student who takes non-college-track courses will face distinct difficulties in gaining admission to college. Those who take inappropriate science and mathematics courses will face similar difficulties in gaining admission to a science degree program. Some successful scientists did take detours after high school—into

jobs, the military, or other non-college pursuits—only to enter college and excel years later. These instances, however, are relatively rare. Some did successfully switch to a science major after first pursuing degrees in the liberal arts, business, or other fields. Nevertheless, it is difficult to overemphasize the importance of sparking and sustaining a student's interest in science early and encouraging a course selection that keeps career options open.

Full participation in a high school chemistry class is especially important for students who plan to continue on to college, including those with no current plans to major in science. Many students change their majors and career plans after arriving on campus. A solid high school preparation in science and mathematics keeps the student's options wide open and facilitates later decisions to change majors into science fields. Many chemists with disabilities choose their science careers because of inclusion in high school chemistry courses (4). Regardless of career plans, chemistry provides excellent opportunities for students to develop problem-solving skills needed for success in college. High school chemistry provides an opportunity for the student to practice identifying specific needs and strategies for performing each new exercise in the laboratory setting. A high school chemistry student should be strongly encouraged by faculty to learn to communicate those needs to others, especially if this has not been done in the past.

Students, teachers, counselors, and parents may not fully realize that science, mathematics, and engineering can be ideal careers for individuals with disabilities. Success in these fields rarely depends on physical prowess. Instead, it requires many of the traits that individuals with disabilities develop—including the ability to work hard, persevere, overcome obstacles, cope with frustration, and find alternative routes to a goal. Science should be one of the first career options considered by students with disabilities.

Participation, avoiding gaps

Students with disabilities must fully participate in middle school and high school science classes, including labs and other hands-on activities. Like other students, they will need to meet basic math and science requirements in college, whether they specialize in these fields or not. At the secondary level, chemistry teachers can help identify students with disabilities who are interested in participating in the classroom and laboratory and actively become involved in the development of their IEP or 504 plan. The plan development team should include the chemistry teacher, along with the student, the special education teacher, parents, and perhaps others (see Chapter 1 sidebar, What is an IEP?).

Teachers and parents should be aware of the gaps that often

occur in the academic development of students with disabilities and work to avoid them. Sometimes students with disabilities are not held to the same academic standards as their nondisabled peers, especially if their teachers have lower expectations (108). On the other hand, students with disabilities are sometimes unfairly held to even higher standards of excellence than are their peers. The most successful teachers provide appropriate accommodations for students with disabilities, in both classroom and laboratory work, and evaluate their performance fairly.

Lack of access to extracurricular activities may also lead to gaps in interpersonal skills, incidental knowledge, and a lack of self-confidence (24, 109). Teachers should not misconstrue those as deficits in potential ability. Teachers who address students' individual needs will encourage the natural curiosity and love of learning critical for a science career (110; for personal accounts, see 25, 111, 112). The teaching techniques described in this book and the resources listed at the end can help chemistry teachers contribute to an IEP that ensures full student participation.

High school to college

All students become more self-sufficient as they progress through middle school and high school, gradually assuming more of the responsibilities once left to their parents. Students take a greater role in selecting courses, in initiating contact with teachers to get information and resolve problems, and in identifying opportunities for participation in out-of-classroom activities and summer jobs.

Teachers, counselors, and parents should encourage students with disabilities to develop as much self-sufficiency as possible. As students make the transition from secondary school to college, they should have the skills and knowledge needed to compensate for their disability and take greater responsibility for self-advocacy. An advocate is a supporter or defender who argues for a cause, usually on behalf of other individuals. Students with disabilities must learn to advocate for themselves. Effective self-advocacy involves several steps, such as

Identify needs. Analyze the situation, consider options for addressing it, and be prepared to suggest specific solutions.

Know who to ask. Identify the specific individual or agency with authority to resolve a problem. Identify the chain of command in the event that initial contact does not resolve the situation satisfactorily.

Know what you are talking about. Be ready to support and document statements, just as you would footnote statements in a term paper.

Communicate the request effectively. Be prepared to briefly

summarize the circumstances of a situation, propose a specific solution, and state why the solution is reasonable. Consider whether the communication would be most effective if presented in person or by e-mail, fax, or letter.

Follow up. Establish a time frame for resolution and make contact again to determine the status of the request.

Recognize the value of persistence. Continue the follow-up process—if necessary by working up the chain of command.

Understand legal rights. Many problems result from simple misunderstandings, and can be resolved courteously when all parties have better information and a clearer understanding of the circumstances. Threats of legal action should be a last resort. Have accurate information about the relevant laws before proceeding.

Understand the limitations of the system. Be aware that problems often can be resolved best on the local level: with the individual instructor, within the department, with the administration of the school. If a problem is taken through the legal system, the college term or school year may be long over before the final resolution is reached.

Teachers and parents can encourage self-advocacy in a variety of ways. Being an advocate requires good communication skills. Students with disabilities should be familiar with the use of e-mail, fax machines, TTYs, and other means of communication. Familiarity with search engines and effective search strategies on the World Wide Web is important for acquiring information about assistive technology, disability laws, and names of individuals with the authority to grant requests. Self-assertiveness skills are also important. Students can practice by talking with adults to articulate their own needs, contacting services like vocational rehabilitation, and attending meetings.

Acquiring skills

Students moving from high school to college can learn advocacy skills by getting involved in advocacy groups for their disability and with campus groups for students with disabilities. These groups may have pamphlets, web resources, and other information that a student can provide to the faculty to help raise awareness of his or her capabilities. For example, a student might give to science faculty and to vocational rehabilitation counselors printed information illustrating the reasonableness of the student's participating fully in chemistry and other sciences. The information might include print material about the DO-IT program, the ENTRY POINT! program of internships for students with disabilities (113), or copies of *Working Chemists with Disabilities* (4), available with-

Moving on to college

When preparing for and choosing a college, students with disabilities consider many of the same factors that are important to all high school students, including the college's academic standing, size, degree offerings, cost, and distance from home. Students and parents, of course, should weigh the importance of these and other factors on an individual basis. Many students with disabilities have found the following tips especially helpful in making college decisions:

- Contact your state vocational rehabilitation office and college financial aid offices to check on sources of college funding and assistance with accommodations.
- Contact the DSS office at your preferred college early and find out what resources it offers people who have a disability like yours. If the campus or office has adaptive computer labs, determine whether the equipment meets your needs.
- Visit the campus and the department of your prospective major. Do not hesitate to ask DSS or admissions personnel about possible funding for your travel to the campus. It may be available.
- While on campus, check the accessibility of buildings, transportation, classrooms, laboratories, and student housing. Note campus size, and estimate the time needed to get from one class to another.
- Tune into attitudes of the individuals you meet and the campus culture. Are staff members in the admissions and DSS offices welcoming and helpful? Are faculty members willing to meet with you and discuss their courses? How do students regard you? Ask whether the DSS office provides early registration for students with disabilities. Most consider this an essential service for many students with disabilities. Then find out the exact dates and times of early registration.
- Remember that assistive technology provided by your high school may not be available after your graduation. Use your summer transition time to locate new sources of equipment and assistance you need for college.

After high school graduation, students often benefit from using summer vacation time productively as a transition to college. Check with professors about getting titles of textbooks, copies of course syllabi, and other written material. Some students with reading disabilities can benefit from starting to read the textbooks before the semester begins. Others may benefit by working with the DSS office on converting texts and other written materials into Braille or other alternative formats. See the DO-IT web site for in-depth techniques for successful transitions from high school to college (119).

out charge from the American Chemical Society (ACS). Printed material, of course, should supplement—rather than substitute for—the personal rapport that students should develop with faculty and others.

Knowledge about the disability community can be very helpful. Disability-specific groups and networks are good sources of information about assistive technologies, accommodation strategies, and other topics important in the self-advocacy process. In many instances, self-advocacy may involve assistive technology, and students with disabilities should have basic knowledge of the specific assistive devices often used for their disability.

College

When the student with disabilities enters college, several changes occur that make self-advocacy skills more important. The college

Research and internship opportunities for students with disabilities

Internships. Work-study programs. Summer jobs in real-world workplaces.

Participation in such enrichment activities—important for all students—is particularly valuable in opening doors to higher education and jobs for students with disabilities. These experiences demonstrate that the student can, in fact, do science.

Faculty can greatly facilitate career opportunities by informing students about opportunities and resources for gaining practical experience and encouraging their participation. These programs include grants, internships, and other opportunities.

NSF/NIH research supplements. Special awards are available to assist students with disabilities in pursuing study and research in science from the National Science Foundation (NSF) and the National Institutes of Health (NIH). NSF offers its award, "Facilitation Award for Scientists and Engineers with Disabilities," and NIH offers grants, "Research Supplements to Promote Recruitment of Individuals with Disabilities into Biomedical Research Careers." These monies can provide modified equipment so students can participate in both NIH and NSF research, as well as provide NIH funding for student participation at the high school, college, or graduate level.

AAAS and ENTRY POINT! Internship Programs. One challenge after students earn their degrees is finding suitable employment or gaining admission to graduate or professional school. Internship programs such as ENTRY POINT! give the student workplace experience and an opportunity to demonstrate capabilities to potential employers or graduate programs. ENTRY POINT! is sponsored by the American Association for the Advancement of Science (120), with internship support from government laboratories and industry. The AAAS also provides additional resources for scientists with disabilities through its Project on Science, Technology and Disability (see Resources section).

DO-IT. DO-IT provides internships, mentoring programs, adaptive technology, and other opportunities for high school students in an effort to increase the number of science careers among students with disabilities. The organization also provides an extensive set of networking, career, and employment resources for students with disabilities and their faculty mentors (50).

The Regional Alliance of Science, Engineering, and Mathematics. RASEM at New Mexico State University provides opportunities at partner institutions for students at the K–12 and college levels. Their mission is to provide encouragement and support in order to "level the playing field" for students interested in careers in science, engineering, and mathematics (121).

American Chemical Society. ACS provides travel grants for students with disabilities to cover additional disability-related expenses when presenting their research at scientific meetings (122).

student, for instance, is no longer covered by the IEP, that written master plan that defined accommodations and other aspects of the student's high school education. In college, the student has responsibility for arranging any needed accommodations, usually through the DSS office. When the student is no longer a minor, privacy regulations usually preclude further involvement of the parent in accommodation decisions. The high school-to-college transition also brings changes in the set of laws that define the rights and responsibilities of people with disabilities. Students should understand that IDEA jurisdiction ends with their graduation from high school. At the college level, the Rehabilitation Act and ADA come into play.

In this new environment, it is especially important that students with disabilities be able to articulate what their disability is and how it impacts their learning skills. They should have an understanding of what accommodations work best for them. They should be able to seek out and obtain available financial resources. Teachers and counselors can help in identifying potential funding sources. Many students with disabilities receive college financial assistance through a state vocational rehabilitation office. These agencies provide financial and other assistance in the education of individuals with disabilities. Vocational rehabilitation rules on eligibility and assistance vary from state to state. Students should check with the appropriate agencies in the state where the school is located and in their home state. The student should find out what accommodations the agency will provide, what costs will be covered, and who pays for uncovered costs. The college is responsible for some, and others are the student's responsibility.

The DSS office

Despite their growing role in advocacy, college students with a disability should make full and effective use of advocacy and other services in the DSS office. Ideally, students will visit or contact the DSS office before the start of the academic term. From that first visit, students should establish a rapport with the DSS staff (see sidebar, Working with the DSS office, on page 19). The DSS office's central role should be to ensure that students can obtain necessary and reasonable accommodations. Students have the responsibility for providing DSS personnel with documentation establishing their need for accommodations. Students benefit most when they understand the role of DSS offices, know their own capabilities and limitations, and actively assist in educating faculty and DSS personnel about their individual needs.

In scheduling classes, all students should consider how long it will take them to reach a class across campus. That could be a special consideration for students with disabilities, especially on large campuses. If scheduling more time between classes is not an option, then the student needs to address this issue with the professor. Students with disabilities should preregister at the earliest opportunity to be sure their class schedule meets these and other logistic requirements. That may include scheduling interpreters, laboratory assistants, providing the DSS office with adequate time to obtain materials in alternative format, or other academic accommodations.

Students, DSS personnel, and faculty should work together to maximize the opportunity for success. The importance of that cooperation cannot be overemphasized. Faculty should understand

that students with certain disabilities might have anxieties about taking laboratory courses. Professors can make a great difference in a student's life by providing reassurance, demonstrating acceptance, and expressing a willingness to be flexible. Faculty should also understand that while students new to the department are experts about their own disabilities, they probably lack knowledge about labs and classrooms. The student may need a period of familiarization with the new environment to identify necessary accommodations. Likewise, students should be open to new ideas and opportunities.

DSS offices, faculty, and peers may have useful new suggestions for accommodations. These new approaches may even work better than accommodations or strategies that the student has used in the past. Students also need to understand that the specific services and accommodations available at one institution are not necessarily available at another. Although accommodations are mandated under the law, specific accommodations for specific disabilities are not. Institutions have flexibility in selecting specific accommodations for specific disabilities.

Resolving problems

Self-advocacy can be a useful strategy in avoiding problems and dealing with many situations that may not require assistance from DSS personnel. For instance, an instructor who is typically aware and sensitive may show noncaptioned videos in a class with a person who is hearing-impaired or constantly turn away from the class when speaking. When a concern first arises, students can point out the problem politely and without accusation. For example, the student could state: "Could I watch that video again, with a script? I couldn't hear any of the audio, and I never want to miss any material presented in class." The student also could establish a signal that can be given during a presentation to remind the teacher about speaking directly to the class.

Most problems can best be resolved with the teacher on a polite, informal, person-to-person basis, with student and teacher showing mutual respect and avoiding threats. Students should prepare to become more assertive if the problem reoccurs and use informal problem-solving/resolution mechanisms within the university. DSS office personnel may help resolve the issue in an informal way or proceed to a more formal approach, if needed.

In the rare instances in which problems persist, students should know the procedure for filing a formal complaint through the university and DSS office or the designated ADA compliance coordinator. Students should be aware of the limitations of the formal complaint process. Resolution of a formal complaint, for instance,

can take a long time. A formal complaint also may preclude further informal discussion and negotiation between the student and teacher. In addition, the resolution may not be entirely favorable to the student. Students thus should begin with a polite, problem-solving stance and work with faculty and DSS personnel in a collegial manner.

During college, students with disabilities and their instructors should be alert for out-of-classroom opportunities to participate in research and work in internships or cooperative educational programs. These will enhance the student's education, and provide invaluable experiences that open doors for future employment or advanced education. Many possibilities are listed in the Resources section, such as ENTRY POINT!, which helps arrange internships for students with disabilities in industry and government laboratories; the National Science Foundation, which sponsors research at local colleges and universities; and the National Institutes of Health.

College to graduate school, postdoctoral service, and employment

The transition from college to graduate school or employment brings new challenges and opportunities for all students. Advance preparation for these milestones toward a successful career in chemistry is important for all, and especially so for students with disabilities. Some schools require graduate students to serve as teaching assistants (TA). Others give students a choice between serving as a TA and a research assistant (RA). Students with disabilities often can serve effectively as either a TA or RA. Preparation to perform these duties should be part of the undergraduate educational experience of all students with disabilities. It will prepare students for both graduate school and participation in undergraduate research programs and other valuable out-of-classroom experiences.

Many graduate schools, and almost all employers, require interviews. All students will benefit from coaching on successful interview strategies. Students should, for instance, anticipate likely interview questions and mentally prepare "sound bites," brief but concise answers that can be stated without hesitation. Faculty can help with this process by suggesting likely questions, participating in practice interview sessions, and in other ways.

Students with disabilities may benefit from coaching on additional topics. These include tactics for dealing with illegal, unethical, or intrusive questions, and how to address topics like their academic and laboratory performance abilities in relation to their needs for accommodation. Some students may know that employers cannot

legally ask questions about their disabilities, but can only ask whether the applicant is able to perform the essential functions of the job. Therefore, students with an obvious disability can benefit greatly during the interview by taking the initiative with a positive approach to the unasked question. "You might be wondering how I perform laboratory work. I'd like to tell you about the accommodations I have used which enabled me to perform successfully and achieve the accomplishments mentioned in my résumé."

One common dilemma involves the stage in the application process when it is most appropriate to disclose the existence of a disability. Students often are concerned that early disclosure of a disability may preclude their further consideration for the position. They worry, for instance, about being excluded before the personal interview, which provides an opportunity to address and resolve issues about fitness for the position. This topic is discussed in the following section.

Graduate faculty generally have extensive networks in academe and industry. These contacts include individuals who can help open doors for graduate students. Faculty networking can be especially helpful in eliminating barriers for their students with disabilities.

Employment

ACS offers employment assistance for members and is strongly committed to improving career opportunities for students with disabilities. Finding work in a competitive job market requires well-developed strategies, especially for chemists with disabilities (114–116). ACS provides helpful booklets, including one that addresses how Title I of the ADA affects the job search for individuals with disabilities. The ACS book *Working Chemists with Disabilities* describes employment strategies used by successful chemists with disabilities. *Working Chemists* can help students with disabilities understand their rights and responsibilities and reinforces the importance of their active participation in seeking mentoring and employment. It gives examples of simple strategies used by scientists with disabilities to become successful participants in the scientific endeavor. Students can also contact the ACS Committee on Chemists with Disabilities for lists of scientists with disabilities who are willing to serve as resources and mentors and for other career assistance (117).

Students with disabilities need to recognize the importance of developing job search and interview skills and preparing for disability-specific issues involved in the process, such as the appropriate time to disclose a disability. ACS provides an extensive array of excellent resources and career guides for students seeking employment. Students with disabilities should be particularly aware of the

employment resources available at ACS national meetings. These include mock interview sessions with ACS Career Services professionals, assistance with résumé preparation, discussions with career consultants, extensive opportunities to interview with many actual employers on site, networking opportunities, and much more. Faculty mentors should note that ACS national meetings are accessible and provide employment resources in a setting that facilitates their use by students with disabilities.

Students with disabilities are often faced with the dilemma of when to disclose a disability and how to address essential functions of the job. Students should investigate this issue carefully, as there is no generic recommendation that works well in all circumstances. Fortunately, students can find many examples of individuals who have successfully addressed this issue. Helpful resources include the DO-IT program's career page (118) and the ACS Employment Guides.

Students should also understand the law concerning disclosure and interviews. Consider, for instance, the student with a learning or other disability that is not readily apparent and does not require accommodations that affect the essential functions of the job. In that case, the individual need not disclose the disability until offered the job. However, students with an obvious physical disability can find it advantageous to take the initiative at an early stage in the application process. They should discuss in a positive manner their past accomplishments and how they will perform a job's essential functions.

Accomplished students with disabilities, nonetheless, often face an unwarranted credibility gap when seeking employment. Most companies and hiring managers have had little experience interacting in the workplace with scientists who have disabilities. Faculty can fill an important need by using their own networks to open doors and in assuring prospective employers of students' abilities. Faculty should be advocates for students with disabilities to ensure that they get job interviews and opportunities equal to those obtained by their nondisabled peers.

Chapter 7.
UNIVERSAL DESIGN: ACCESSIBILITY FOR EVERYONE

Terms like "disabled" and "able-bodied" create an unfortunate all-or-none misperception about human ability. People are not either able-bodied or disabled. Rather, human beings display varying degrees of physical ability. Some correlate with stages in the human lifespan. Robust men and women in their adolescent years, 20s, and 30s generally can accomplish a wider range of physical tasks, and do them with greater ease, than children or older adults. An individual's level of ability is not fixed, but often highly variable, constantly changing with time. For most people, those changes occur slowly, as age claims its inevitable toll on muscle strength, hearing, vision, and mental agility. Ability can also transition from one level to another abruptly because of accidents or serious illnesses. Being "able-bodied" is a temporary human condition.

Classrooms and laboratories

Universal design is a philosophy of accessibility for all. It calls for making all objects, buildings, indoor environments, landscapes, and other places accessible to and usable by the greatest number of people to the greatest extent possible—regardless of their degree of ability or disability. For an academic institution, that means accessible school grounds or campuses, buildings, rooms inside buildings, equipment and facilities inside rooms, course content, and web sites and other information products networked throughout the institution.

An ordinary lever-type door handle, operated with a pushing action, is the epitome of universal design. The young child, the older adult with arthritis, the laboratory instructor carrying equipment, and the student with limited hand movement all might have difficulty grasping and turning a round door knob. The lever handle, in contrast, works easily with a push of the hand, nudge of the hip, or bump of a wheelchair. More people can reach electric outlets placed a few inches higher above the floor without needing to bend or stretch. Adjustable shelves, office chairs, countertops, and clothing rods all have an inherently universal design (123).

The principles of universal design incorporate many of the most common accommodations used by individuals with disabilities. At the same time, they make everyday activities easier and safer for everyone. Universal design is economical for several reasons. Universal design in the laboratory allows the greatest flexibility because items are not adapted to a particular disability but have a

BEST COPY AVAILABLE

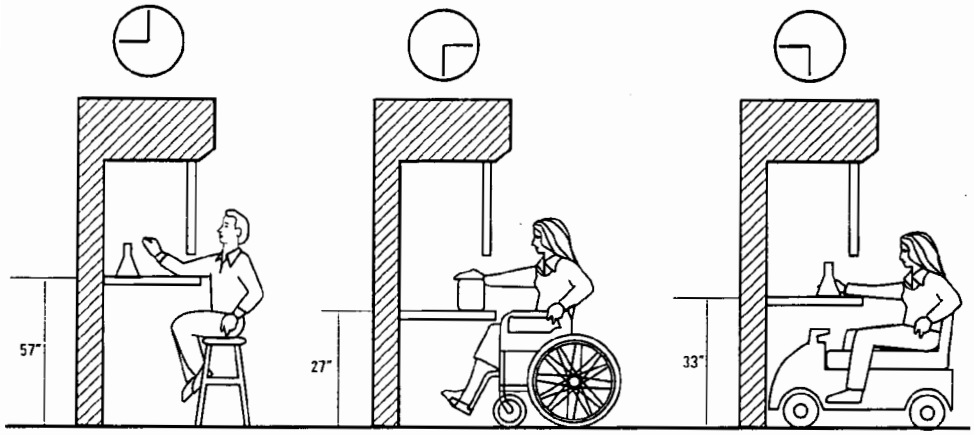

Figure 4. Fume hood clearances

broad application. It is generally less expensive to design with accessibility for all users in mind than to convert an existing setting to make it more accessible. In addition, the quality of access is far superior when accessibility is incorporated into the structural design from the beginning. Poorly designed science classrooms and laboratories, for instance, can require more significant accommodations for students with disabilities. However, universal design principles applied during reconstruction or remodeling usually result in facilities usable by students with disabilities with little, if any, additional cost.

User-friendly emphasis

Clarity in labeling, intuitive use, and decreased dependence on reading skills are also aspects of universal design. For example, students with disabilities must be able to use fume hoods safely when they are required for a laboratory exercise. Unfortunately, persons with mobility disabilities cannot easily use most older-model fume hoods. Students with limited vision or learning difficulties may also find fume hood controls and functions difficult to use. A walk-up, floor-to-ceiling fume hood, in contrast, can meet the needs of all students.

Universal design results in lab facilities that are user-friendly, safe, and easily reconfigured for changing research or teaching needs. They also can be used for extended periods without renovation. Everyone benefits from a design that is easier to use, as illustrated by the "curb cut" phenomenon. When curb cuts were put in sidewalks to facilitate wheelchairs, they were found to be a boon to parents with baby carriages, bikers, skaters, and the elderly. The flexibility of similar simple design changes accommodates many different users and many different uses.

Adjustable-height laboratory fume hoods are one example. They can be used by students in wheelchairs, as well as tall or short peo-

ple who may work seated or standing. Other examples include adjustable-height laboratory benches and modular furniture, which can be reconfigured for wheelchairs, different instruments, research tasks, and other applications. Such designs can extend the lifetime of a laboratory, which can be reconfigured at little or no cost for uses and users that were not anticipated during initial construction.

Universal design for the lab

Some characteristics (123) of a laboratory that incorporates universal design include the following:

- Adjustable-height storage units and special-equipment work space. Pullout or drop-leaf shelves or countertops for auxiliary use can be included, such as shelves at lapboard height for holding instruments to be used by students in wheelchairs.
- Single-action lever controls or blade-type handles rather than knobs for people with impaired manual dexterity.
- Flexible connections to electrical, water, and gas lines for students with limited reach, such as those in a wheelchair.
- Alternative means of storage, such as a portable "Lazy Susan" or a storage cabinet on casters.
- Lever-type handles substituted for knobs that require grasping with a hand and turning with a wrist, for water, gas, and steam lines.
- Controls located on both the right and left sides for utilities, for the benefit not only of people who are impaired on one side of the body but also for those who are merely left- or right-handed.
- Tactile cues for potentially dangerous arrangements or situations, which benefits individuals who are vision-impaired or have learning disabilities.
- Accessible acid storage or solvent storage shelves that go under a floor-to-ceiling fume hood and can include a bottom shelf as a drawer. When combined with adjustable height tables, this allows a typical fume hood to be modified for many different uses, from organic synthesis to microbiology settings.
- Utilities that can be relocated to workstations used by students with disabilities.
- Sinks with flexible connections for use in adjustable-height fume hoods and with laboratory benches.

Chemistry departments should give the most serious consideration to embracing universal design in the construction of new laboratory facilities and the renovation of existing labs. For numerous other examples of universal design techniques for the chemistry laboratory, see Blake-Druker Architects (124).

On the Internet

The Internet has opened a new realm of information, communication, entertainment, shopping, and other resources that are available around the clock without leaving the home, office, or dormitory room. This easy access to such a powerful communications tool—useful for everyone—can be extraordinarily helpful for individuals with physical disabilities. It truly does put the world at our fingertips, requiring just a glance of the eye, a click of the mouse, an ear to the audio. All those benefits are available, that is, to individuals who can see a computer monitor, manipulate a mouse, hear the audio, distinguish among a variety of colors, and perform other tasks needed to access web content.

One in every 10 Americans (about 27.3 million people) has severe physical disabilities that significantly limit access to the very web content that could be so beneficial. Millions of others, including many older individuals, have less-severe physical disabilities that make web pages more difficult to use. Students with disabilities do have access to screen readers that convert screen content to audio, software that magnifies screen content, and other assistive technology to facilitate their use of the Internet. But many barriers to accessing web content still exist.

Consider the following example, adapted from WebAIM (126), of the difficulties that a simple tabular course schedule poses to students with vision disabilities who use a screen reader.

Course number	Department	Time	Days	Credits	Classroom	Instructor
300	INST	2:00	MWF	3.0	DFB 378E	Smith
120	PHYS	11:30	TR	3.0	GRB 228	Jones
214	PSY	10:00	MW	3.0	DFB 214A	Collinwood

In producing an audio version of the table, a screen reader might say the following:

> "Table with seven columns and four rows. Course Number. Department. Time. Days. Credits. Classroom. Instructor. Three hundred. Inst. Two o'clock. M. W. F. Three point oh. D. F. B. Three hundred seventy eight E. Smith. One hundred twenty. Phys. Eleven thirty. T. R. Three point oh. G. R. B. Two hundred twenty eight. Jones. Two hundred fourteen. Psy. Ten o'clock. M. W. Three point oh. D. F. B. Two hundred Fourteen A. Collinwood."

Assistive technology did convert web content from an inaccessible form (visual data) into another (audio) that is accessible to the student with a visual disability. But the information still may not be fully accessible.

Trends in web page design and applications have introduced new

BEST COPY AVAILABLE

problems for existing assistive technologies. These include the more extensive use of web page graphics, which can't be translated by a screen reader; the introduction of increasingly complex graphics; and the wider use of multimedia features that require good eyesight and hearing.

Why do it?

Internet content should be accessible to students with disabilities for the same reasons that buildings, classrooms, laboratories, and other items should be accessible (see Chapter 1). It's the right thing to do: Access to web content should not be limited to individuals with certain physical attributes. It's the law for federal agencies: Section 508 of the Rehabilitation Act requires that Internet content and other information technology developed, bought, or used by the federal government be accessible. Regulations implementing Section 508 took effect in mid-2001 and were expected to have broad influence in encouraging accessible web pages throughout society. Some educational institutions have felt obliged to provide accessible web content under Section 504 of the Rehabilitation Act, the ADA, or relevant state laws. They have embraced universal design for web accessibility as institution-wide policy.

In addition, web page modifications made for individuals with disabilities often benefit all users. One excellent example is the addition of alternative text, or "alt tags," for graphics and other images on a web page. Alt tags give individuals who are blind or vision-impaired a text description of graphics that can be converted to audio by their screen reader technology. Without alt tags, images and whole pages may be useless to a student, since screen readers are unable to interpret the graphical content of an image. If images are used as links, omission of alt tags also may affect a student's ability to navigate through a site and to use links to other sites.

Having text-based content also is important for nondisabled users. For instance, some individuals with slower dial-up connections frequently turn off graphics for faster loading of pages. They will miss graphics content unless it also is available in an alternative text format. Increasingly, web page content is being delivered to personal digital assistants (PDAs), cell phones, and other mobile computing devices. Screens on these devices are small, making it difficult or impossible to view graphics-intensive sites. Text may always be the preferred way to view information on small, mobile computing devices. Advances in audio and other technology also may increase the importance of text alternatives to graphics. For instance, mobile computer users may choose to have web content read to them while commuting, walking, or exercising. Alternative text formats will make that possible.

Much of the technology for making web sites more accessible has been available for years, and more is being developed. The main requirements for accessible web pages in academia are simple: Teachers and administrators who are aware of the need for accessible web sites and who are committed to meeting that need. Educators should communicate that commitment to the web page author and developer. Many web-authoring tools provide automated ways of inserting accessible features into pages. Other tools do not, and the web developer may have to add additional coding—such as specific hypertext markup language (HTML) instructions—by hand. Specific instructions to design a web page for accessibility may be helpful in encouraging web authors to devote adequate time to this process. This extra effort may not be made unless the web author receives specific instructions to design a page for accessibility.

Online accessibility validation tools can help determine whether existing web pages, as well as newly designed pages, are accessible to students with disabilities. They include the World Wide Web Consortium HTML Validation Service (127) and the Bobby Accessibility Checker (128). Commercial validation tools also are available and can be located by searching the Internet.

Accessibility guidelines

Guidelines for developing accessible web pages are available on the Internet. The definitive guidelines (129) were developed by the World Wide Web Consortium (130), which establishes protocols and standards for the web. W3C's Web Accessibility Initiative (WAI) organized accessibility standards into three priority levels. Priority 1 guidelines are those that must be met for a page to be regarded as accessible. Priority 2 guidelines should be met. Priority 3 guidelines may be met. W3C has developed logos that can be inserted into web pages to indicate the level of compliance. The Architectural and Transportation Barriers Compliance Board, widely known as the Access Board, used the WAI standards in developing its Section 508 standards (131). The Access Board is an independent federal agency devoted to increasing access for individuals with disabilities.

WebAIM used the W3C standards as the basis for developing what at press time was a prototype web accessibility standard that specifically addresses needs of individuals with disabilities in educational settings. The standards can, at a minimum, serve as the starting point for dialogues on accessible web policy at colleges and other educational institutions (132). In considering standards, educational institutions should do the following, according to WebAIM:

The 7 principles of universal design

Items selected from the North Carolina State University Center for Universal Design (125).

Principle 1. Equitable use

- The design benefits people with diverse abilities.
- Provides the same means of use for everyone, which should be identical when possible or equivalent when not.
- Avoids the segregation or stigmatization of any user.
- Provisions for privacy, security, and safety should be equally available to all users.
- Workstations should be ready to use immediately without summoning maintenance personnel.
- Provides support for portable assistive technology tools or devices.
- Workstations should be ready-made for assistive technology like network connections, speakers, and other devices.
- Design should be welcoming and appealing to all users.

Principle 2. Flexibility of use

- The design accommodates a wide range of individual preferences and abilities.
- Provides choice in methods of use.
- Accommodates right- or left-handed access and use.
- Uses adjustable-height workstations.
- Provides easy access to utilities.
- Facilitates the user's accuracy and precision.
- Adapts easily to the user's pace.
- Provides moveable chairs and tables that can be reconfigured easily.
- Uses variable lighting and, where possible, natural light to control glare.
- Provides adjustable writing surfaces, like chalkboards, so writing surfaces can be individually tailored.
- Includes an instructor's workstation viewable from all locations in the lab.

Principle 3. Simple and intuitive

- The design is user-friendly and can be easily used regardless of the individual's experience, knowledge, language skills, or current level of concentration.
- Eliminates unnecessary complexity.
- Is consistent with user expectations and intuition.
- Accommodates a wide range of literacy and language skills.
- Arranges information in a manner consistent with its importance.
- Provides effective prompting and feedback during the task and after completion.
- Color-codes controls and outlets. A fume hood, for example, uses blue as the color for both the gas control handle and the nozzle inside the hood where the gas comes out.
- Places controls in a logical location and in a consistent manner.

- Identify all applicable laws and regulations that relate to accessible web content.
- Use the W3C accessibility standards as guidelines for developing standards that fit the needs of their specific institution. At a minimum, institutional standards should meet the WAI Priority 1 standard (things that must be included on a web page).
- Review standards set by educational institutions similar in terms of mission, size, and other characteristics.
- Avoid unilateral decisions. Get input from a broad range of indi-

The 7 principles of universal design (continued)

Principle 4. Perceptible information

- The design communicates necessary information effectively to the user, regardless of ambient conditions or the user's sensory abilities.
- Communicates in different modes, including pictorial, verbal, and tactile, for redundant presentation of essential information.
- Provides adequate contrast between essential information and its surroundings.
- Maximizes the readability and appearance of essential information.
- Differentiates elements in ways that can be described, making it easy for the instructor to give instructions.
- Provides compatibility with a variety of techniques or devices used by people with sensory disabilities.
- Uses labels in Braille as well as a large, high-contrast font.
- Differentiates controls of more dangerous utilities (e.g., steam) from others with tactile differences.
- Provides high-contrast visual cues to identify changes in levels and edges of horizontal surfaces, such as on the edges of counters or any place the floor level deviates.

Principle 5. Tolerance for error

- The design minimizes hazards and the adverse consequences of accidental or unintended actions.
- Arranges elements to minimize hazards and errors; groups most-used elements in the most accessible area; eliminates, isolates, or shields hazardous elements.
- Provides warnings of potential hazards and errors.
- Includes fail-safe features.
- Discourages unconscious action in tasks that require vigilance.
- Ensures that safety equipment is usable by people with all levels of capabilities.
- Enhances alarms, for things such as such as airflow, so that they provide auditory, visual, and even physical cues.
- Provides safe placement and transport of materials.
- Provides a safety trough to catch liquid, to prevent spills on legs that do not have sensation.

Principle 6. Low physical effort

- The design can be used efficiently and comfortably and with a minimum of effort and fatigue.
- Allows users to maintain a neutral body position.
- Provides equipment that can be operated with reasonable strength.
- Minimizes repetitive actions.
- Minimizes sustained physical effort.
- Makes sure utilities require less than 5 pounds of pressure to operate.
- Makes sure hardware is operable with a stick or without grasping.
- Places controls within easy reach.

Principle 7. Size and space for approach and use

- People with different body sizes, postures, and degrees of mobility can approach, reach, manipulate, and use equipment and facilities.
- Provides a clear line of sight to important elements for any seated or standing user.
- Makes the reach to all components comfortable for any seated or standing user.
- Accommodates variations in hand and grip size.
- Provides adequate space for the use of assistive devices or personal assistants.
- Provides adjustable-height workstation for people of different heights or in different height wheelchairs and varying heights for alternative research goals.
- Ensures accessibility and safety, with aisles that are clear and adequate for exiting.

viduals, including administrators, web developers. faculty, students, and especially individuals with disabilities.

- Develop a system to identify and maintain contact with individuals who place content on the institution's site. Especially important is a registration process that allows individuals to be contacted by e-mail.

Web developers also can use commercial kits to build or retrofit web sites to comply with Section 508 and other accessibility standards. One, for instance, is the Macromedia Accessibility Kit (133). SSB Technologies offers a software suite that diagnoses and retrofits inaccessible web sites (134). One part of the suite, InSight, allows page authors to diagnose a web page for inaccessibility. Another, InFocus, allows the author to quickly fix the problems of an inaccessible web page. A third, Clarity, generates reports on the accessibility of an entire web site, including summary statistics and page-level detail.

Accessibility of many web pages can be greatly improved by simply inserting a link to a text-only version at the very top of a page, where a screen reader will encounter it immediately. At the very least, it is essential to provide text alternatives to graphics. Alternative presentations of tabular information can be introduced with relatively little effort. For example, the table could be presented in alternative design so that the headers can be read along with the data in this fashion: "Course number, 300; Department, Inst; Time, two o'clock; Days, M W F; Credits, three point oh; Classroom, DFB378E; Instructor, Smith." Web developers can find instructions for designing tables that can be read in this way at the WebAIM web site (135).

Accessibility needs for specific disabilities

The actual process of retrofitting an existing web site for accessibility, or incorporating accessibility features into a new site, usually is done by web authors, web developers, or other information technology professionals. Teachers and school administrators, however, should be aware of the barriers often encountered by students with disabilities. The following material focuses mainly on barriers related to web page design. Chapter 4 contains information on other barriers that involve computer hardware, web browsers, and operating system software.

Students who are blind or have low vision or color blindness

First and foremost, these students need text equivalents of graphics content. Screen readers are the basic assistive technology for

transforming information on a computer monitor into audio. As discussed above, screen readers cannot interpret the content of graphics, unless the graphical content also is provided in an alternative text format. Students also need web pages that can be navigated easily using the Tab key, since good eye-hand coordination is required to navigate using a mouse. The student presses Tab repeatedly until the screen reader announces the desired item. The student then selects the item by pressing the Enter key. Information presented by color alone, or by contrasts in color intensity, also can be a barrier. If possible, video clip content also should include descriptive narration or be made available in text format.

Students who are deaf or hearing-impaired

Students who are deaf or hearing-impaired benefit from text or other visual representations of audio information on a web site. Closed or open captioning can accompany audio clips or video content that involves speech or other sounds. With the limitations on video size and resolution that existed at press time, it was difficult or impossible for a person with a hearing impairment to speech-read individuals speaking in a video.

Students with limited mobility

Some students with limited mobility in their arms and hands can use a standard keyboard and mouse to navigate a web page. Many others use the keyboard, with or without assistive devices such as a mouth-stick or head wand (see Chapter 4), to access the keyboard and rarely if ever use the mouse. Web page features that facilitate keyboard navigation are important for these individuals. When possible, web developers should avoid features that unnecessarily require multiple repetitive movements, which can cause fatigue in individuals using head wands and other assistive devices. Long lists of hypertext links, such as those on a site's main navigational page, are one example. The student using a head wand may have to press the Alt key dozens of times to reach a desired link. When possible, developers can include a mechanism that allows the user to navigate directly to a desired link, rather than proceeding through a lengthy list.

Students with learning disabilities or ADHD

Well-designed web sites, organized in a logical fashion with simple, intuitive interfaces and clearly worded text, benefit all users. These features can be especially important for individuals with learning disabilities or ADHD. Also beneficial are web sites that sustain the same organizational scheme from one page to the next and use appropriate graphics or icons that supplement and enhance

text. Graphics, however, should be functional, assisting in understanding text or navigating through a site. Purely decorative graphics may be a distraction to some students. Students with some learning disabilities may use screen readers, so text representations of graphics are important. These students also may learn best when information presented in video clips or streaming videos also is available in captioned or other text format.

Web pages often contain banners and other graphical elements that blink on and off in an effort to catch the viewer's attention. However, animated graphics can make it more difficult for individuals with learning disabilities to focus on the content. Flickering graphics can pose a hazard for students with seizure disorders by inducing a seizure. Flicker rates between 2 and 55 hertz are most likely to have this effect and should never be used on a web page.

Conclusion: A great adventure for all

Teaching chemistry on the high school and college levels is an adventure in creativity and discovery for instructors and students alike. Educators use their creative skills to pass along the legacy of chemistry—the central science. Chemistry is a central part of other scientific disciplines, from astronomy to zoology, and influences aspects of everyday life.

Students taking a first chemistry course should experience the excitement of an explorer just entering a mysterious new world filled with wonders galore. Sometimes, the fascination deepens, and those initial forays culminate in a productive and satisfying career in chemistry. Teaching chemistry to students with disabilities can provide new opportunities for teachers and students to use their creativity in the classroom and the laboratory. This manual, and the resources that follow, can facilitate that process and help to ensure full participation in this great adventure for everyone.

Resources

Professional association resources in science and engineering for persons with disabilities

American Chemical Society
Committee on Chemists with Disabilities
membership.acs.org/C/CWD
1155 16th St., NW
Washington, DC 20036
800-227-5558 (U.S. only)
202-872-4600 (outside the U.S.)
Fax 202-872-4615
cwd@acs.org,

The mission of the ACS Committee on Chemists with Disabilities is to make all programs and activities of ACS available and accessible to persons with disabilities; to assist the removal of existing barriers, both physical and attitudinal, to the education and full employment of persons with disabilities; to facilitate the involvement of persons with disabilities in the chemical profession and in ACS activities; and to help prevent the creation of additional barriers. ACS is committed to making its regional and national meetings and specialty conferences accessible to persons with disabilities. Upon advance request, accommodations will be made for housing and for attendance at technical sessions and meeting special events. The committee has also published *Working Chemists with Disabilities: Expanding Opportunities in Science,* which profiles 18 chemists and discusses simple accommodations. The book is available on the web site or at the above address at no charge from ACS.

ACS Career Services enhances the economic and professional status of chemistry professionals. Services and products provide direct contact with employers; career assistance; and information on employment data, trends, and issues. Six categories of these services and products are available: publications (including appendix C from *Knock 'Em Dead,* specifically for persons with disabilities), workshops and presentations, employment services, individualized career advisement, workforce analysis, and videos. Career Services considers special career-related requests for new programs or amendments to existing programs from special interest groups such as women, younger, disabled, and minority chemists.

ACS published an illustrated review of special equipment for use in high school teaching laboratories called "Disabilities SourceBook for High School Chemistry Teachers" in *CHEMSOURCE*, edited by Mary Virginia Orna, Henry Heikkinen, and James Schreck; ACS, Office of High School Chemistry: Washington, DC, 1993.

The ACS Younger Chemists Committee addresses the needs of students and early career chemists, including informal mentoring programs for members.

The ACS Commitee on Chemical Safety publishes the *Safety in Academic Chemistry Laboratories* booklet (membership.acs.org/c/ccs).

American Association for the Advancement of Science
http://people.a2000.nl/gnijhuis/spinal/spinal-comp.html
Project on Science, Technology and Disability
Directorate for Education & Human Resources Programs
1200 New York Ave., NW
Washington, DC 20005
Tel/TTY 202-326-6630
Fax 202-317-9849
vstern@aaas.org
Contact: Virginia W. Stern, Director

The AAAS Project on Science, Technology and Disability was founded in 1975 to allow people with disabilities better opportunities to advance in science, mathematics, and engineering. Primarily an information center, the project links people with disabilities, their families, professors, teachers, and counselors with scientists and engineers who can share their education and career coping strategies in technical fields.

AAAS manages ENTRY POINT! www.entrypoint.org, a program to recruit and counsel undergraduate and graduate students with disabilities majoring in science or engineering and place them in paid summer internships with NASA, NSF, IBM, and other technical companies in the private sector.

AAAS publications include a directory of scientists and engineers with disabilities and *Talking About Disability: The Education and Work Experiences of Graduates and Undergraduates with Disabilities in Science, Mathematics, and Engineering. Executive Summary*, by Virginia Stern and Shirley Malcom; *Talking about Disability: The Education and Work Experience of Graduates and Undergraduates with Disabilities in Science, Mathematics and Engineering,* by Elaine Seymour and Anne-Barrier Hunter (1998); and *Roadmaps & Rampways: Profiles of Science and Engineering Students with Disabilities,* by Virginia Stern and Michael Woods (2001).

AAAS videos include *A Critical Difference: Mentoring Students with Disabilities in Science and Engineering; The Problem Solvers: People with Disabilities in Engineering Careers; Taking Apart the Toaster;* and *Focus on Ability.*

AAAS also has a long-time commitment to making all of its

meetings and conferences accessible to people with disabilities. Every AAAS annual meeting has a Resource Room for registrants with disabilities as well as some events specifically geared to scientists with disabilities.

National Science Teachers Association
www.nsta.org
1840 Wilson Blvd.
Arlington, VA 22201-3000
703-243-7100

NSTA is a national association that subscribes to the importance of equal access to science education for students with disabilities. NSTA has a standing committee to address issues in this area, a strong position statement regarding science for persons with disabilities, and numerous articles on persons with disabilities in four journals.

Science Education for Students with Disabilities (SESD) is an affiliated group of the NSTA. SESD publishes the annual *Journal of Science Education for Students with Disabilities* and the semiannual *GoodNewsletter*. The group also publishes a bibliography, updated annually and available through the Educational Resources Information Center. For more information, contact Dr. Judy Egleston-Dodd at the National Technical Institute for the Deaf, Rochester Institute of Technology, or visit the Inclusion in Science Education for Students with Disabilities web site.

Science education

Association on Higher Education and Disability
www.ahead.org
University of Massachusetts, Boston
100 Morrissey Blvd.
Boston, MA 02125-3393
617-287-3880
Fax 617-287-3881
TTY 617-287-3882
ahead@umb.edu

AHEAD is an international association of disability support service offices from more than 600 institutions of higher learning. Although not devoted specifically to science education, AHEAD offers many resources for those at the postsecondary level. AHEAD promotes information sharing through a bimonthly newsletter, a national database, conferences, and special interest task forces. It provides information on laws and testing accommodations for students with disabilities and publishes a newsletter,

ALERT, as well as the *ADA Response Handbook. A Practical Guide for Service Providers* to help service providers gather up-to-date information about the ADA. The handbook may be obtained at the above address.

Barrier Free Education
barrier-free.arch.gatech.edu/index.html
Center for Assistive Technology and Environmental Access
Georgia Institute of Technology
490 10th St.
Atlanta, GA 30318
800-726-9119, 404-894-4960
Fax 404-894-9320
Contact: Karen Milchus
karen.milchus@arch.gatech.edu

This web site, sponsored by NSF, focuses on accommodations for making math and science activities accessible to students with disabilities. It provides extensive descriptions of the use of assistive technology to make chemistry and physics laboratory experiments accessible, particularly for students with physical or visual disabilities. The site includes resource links, curricula, information on specific assistive technology products, and links to vendors.

The Center for Assistive Technology and Environmental Access also sponsors www.assistivetech.net. It is a web portal to disability resources and thousands of assistive technology products, covering education as well as daily living and vocational accommodations. A database of assistive technology can be searched by function, keyword, product type, or vendor. The portal, funded by the U.S. Department of Education's National Institute on Disability and Rehabilitation Research, can be searched by function, keyword, product type, or vendor.

Clearinghouse on Mathematics, Engineering, Technology, and Science
www.rit.edu/~comets
National Technical Institute for the Deaf
96 Lomb Memorial Dr.
Rochester, NY 14623-5604
Harry G. Lang, COMETS Project Principal Investigator
comets@rit.edu

COMETS is a comprehensive resource for well-grounded information about best practices in teaching and curriculum development in science, mathematics, engineering, and technology courses for students who are deaf. The primary focus is on K–12. The COMETS project will also build a network of many different pro-

fessionals who will use these resources for systemic reform and will evaluate its information dissemination strategies with these audiences. (This two-year project evolved from the AESOP project, which was funded by NSF between 1995 and 1998.)

Creating Laboratory Access for Students in Science
biology.wright.edu/labgrant/index.html
Dept. of Biological Sciences
3640 Colonel Glenn Hwy.
Wright State University
Dayton, OH 45435-0001

CLASS is a grant-funded program to develop resources to increase the accessibility of biological laboratories. The center offers training workshops and an online sourcebook of classroom materials.

DO-IT (Disabilities, Opportunities, Internetworking, and Technology)
University of Washington
Box 355670
Seattle, WA 98195-4842
Tel/TTY 206-685-DOIT (3648)
Tel/TTY (State of Washington only, outside Seattle) 888-972-DOIT (3648)
Fax 206-221-4171
Tel/TTY, Spokane Office 509-328-9331
Fax, Spokane Office: 509-326-2261
Director: Sheryl Burgstahler, Ph.D.
doit@u.washington.edu

The University of Washington helps individuals with disabilities transition to college and careers through DO-IT. This site has extensive resources for teaching science and related subjects to students with disabilities. DO-IT offers resources for K–12 and post-secondary educators; publications, videos, and other training materials; information on preparation for college and careers; and programs connecting students and graduates who have disabilities. Primary funding for the DO-IT project is provided by NSF, the U.S. Department of Education, and the State of Washington.

Equal Access to Software Information
www.rit.edu/~easi
P.O. Box 18928
Rochester, NY 14618
716-244-9065
Fax 716-475-7120
EASI@TLTGROUP.ORG

An affiliate of the American Association of Higher Education, EASI provides extensive information on electronic accommodations for students with disabilities at all levels of education, from kindergarten through college. Although the emphasis is on adaptive computer technology and accessible information technologies, this is a very extensive web site with links to information and resource materials on many topics related to science education for students at all levels. A distance-learning course on making software accessible is offered in partnership with the Association for Higher Education & Disability.

The ERIC Clearinghouse on Disabilities and Gifted Education
ericec.org/index.html
The Council for Exceptional Children
1110 N. Glebe Rd.
Arlington, VA 22201-5704
Tel/TTY 800-328-0272
ericec@cec.sped.org

The ERIC Clearinghouse on Disabilities and Gifted Education provides access to the ERIC database of educational materials, which has more than 1,000,000 citations (70,000 citations on disabilities or gifted issues). This clearinghouse collects educational documents, journal articles, and other educational materials on special and gifted education, selecting the highest quality materials; provides information on current research, programs, and practices in special and gifted education (including financial aid); and prepares publications such as *ERIC Digests Readings About Children and Youth with Learning Disabilities* and *Integrating Assistive Technology into the Standard Curriculum.*

HEATH Resource Center
www.heath.gwu.edu
National Clearinghouse on Postsecondary Education for Students with Disabilities
Graduate School of Education and Human Development
The George Washington University
2134 G St., NW
Washington, DC 20052
800-544-3284, 202-994-8740

This is the national clearinghouse on postsecondary education for persons with disabilities, formerly operated as the HEATH Resource Center of the American Council on Education. The clearinghouse is funded by the U.S. Department of Education Office of Special Education Programs to collect and disseminate information about disability issues in postsecondary education. The clearing-

house can provide information and referral on a wide range of topics involving students with disabilities, including transition and career planning, college selection, postsecondary supports and services, and financial aid.

Inclusion in Science Education for Students with Disabilities
www.as.wvu.edu/~scidis/index.html
Department of Biology
P.O. Box 6057, Brooks Hall
West Virginia University
Morgantown, WV 26506
304-293-5201, ext. 2513
Fax 304-293-6363
Contact: E. C. Keller, Jr.

Suggestions for teaching students with disabilities are provided at this web site, along with other information that is useful for preparing Individual Education Programs. Information is available here about the Foundation for Science and Disability, an organization of scientists with disabilities that functions as a resource and advocacy group promoting access to science education and employment for persons with disabilities. Information about Science Education for Students with Disabilities, a group affiliated with the National Science Teachers Association, is also available on this web site.

Journal of Chemical Education
The March 1981 issue [**1981,** *58* (3)] was dedicated to scientists with disabilities. Much of the information is still relevant. The articles listed below addressed issues regarding chemical education and persons with disabilities. Copies of this issue can be obtained from the *Journal of Chemical Education,* Subscription Fulfillment Department, 1991 Northampton St., Easton, PA 18042.

Lagowski, J. J. Chemistry and the Disabled Student (an editorial), p 203.
Crosby, G. A. Attitudinal Barriers for the Physically Handicapped, p 205.
Gavin, John J. et al. Chemistry and the Hearing Impaired, p 209.
Blumenkopf, T. A. et al. Mobility-Handicapped Individuals in the College Chemistry Curriculum: Students, Teachers and Researchers, p 213.
Tombaugh, Dorothy. Chemistry and the Visually Impaired, p 222.
Smith, Deborah. Teaching Aids for Visually Handicapped Students in Introductory Chemistry Courses, p 226.
Lunney, David; Morrison, Robert C. High Technology Laboratory Aids for Visually Handicapped Chemistry Students, p 228.
Brindle, Ian D. et al. Laboratory Instruction for the Motor

Impaired, p 232.
Swanson, Anne Barrett; Steere, Norman V. Safety Considerations for Physically Handicapped Individuals in the Chemistry Laboratories, p 234.

Accessible information technology

Alliance for Technology Access
www.ataccess.org
2175 East Francisco Blvd., Ste. L
San Rafael, CA 94901
415-455-4575
ATAinfo@ATAccess.org

Making technology a regular part of the lives of people with disabilities is the goal of the Alliance for Technology Access. The Alliance has staff at 40 community-based resource centers as well as 70 technical designers and developers who work to increase the awareness, understanding, and implementation of assistive technologies. Based on a spirit of collaboration and partnership, the Alliance is run by children and adults with disabilities, their families and friends, teachers, service providers, and employers. The Alliance partners with industry, such as IBM and the Mattel Foundation, to find new ways to integrate students with disabilities into educational settings where they can use computers and other technology to learn.

The Alliance publishes *Computer and Web Resources for People With Disabilities: A Guide to Exploring Today's Assistive Technology,* 3rd Ed., ISBN: 0897933001 (2000), which is available in bookstores; and *Access Aware: Extending Your Reach to People with Disabilities,* a guide to increasing access and inclusiveness for community organizations, which is available on the web site.

ALVA Access Group, Inc.
www.aagi.com
436 14th St., Ste. 700
Oakland, CA 94612
888-318-2582, 510-451-2582
TTY 510-451-0879
info@aagi.com

This is the U.S. branch and sales organization for ALVA, an international producer of computer hardware and software such as screen readers and Braille display/screen reader combinations.

Adapted Computer Demonstration Center
www.edcenter.org/acdc.html

Education Center
7612 Maple St.
Omaha, NE 68134-6502
402-398-1855, 800-454-7782
Fax 402-398-1424
pva@edcenter.org

This center at the Great Plains Paralyzed Veterans of America maintains a demonstration laboratory of computers with a variety of examples of assistive technology. The computer lab is expected to be available to persons with disabilities.

Apple Computer, Inc.
www.apple.com/education/k12/disability
One Infinite Loop
Mail Stop 303-3ED
Cupertino, CA 95014
800-767-2775
specialneeds@apple.com

Apple provides comprehensive information about its computer products and peripherals for people with disabilities.

Center for IT Accommodation
www.itpolicy.gsa.gov/cita
U.S. General Services Administration
1800 F St., NW
Room 1234, MKC
Washington, DC 20405-0001
202-501-4906
Fax 202-501-6269
TTY 202-501-2010

The center provides information on Section 508 of the Rehabilitation Act of 1973, which establishes requirements for electronic and information technology developed, maintained, procured, or used by the federal government.

Closing the Gap
www.closingthegap.com
Box 68
526 Main St.
Henderson, MN 56044
507-248-3294
Fax 507-248-3810
info@closingthegap.com

Closing the Gap disseminates the latest developments in software, hardware, and adaptive technology for persons with disabilities by publishing a newspaper, maintaining a searchable, online database, and sponsoring annual conferences.

Computers to Help People, Inc.
www.chpi.org
825 East Johnson
Madison, WI 53703
This private, nonprofit organization provides books on science and math in Braille and e-text on a worldwide basis.

DO-IT
www.washington.edu/doit/Resources/technology.html
(Also see main entry under Professional Associations, Resources in Science and Engineering for Persons with Disabilities.)

Dragon Systems, Inc.
www.dragonsys.com
Lernout & Hauspie
320 Nevada St.
Newton, MA 02460
617-965-5200
Fax 617-965-2374
info@dragonsys.com
Dragon Systems is a subsidiary of Lernot and Hauspie, Brussels, Belgium. L&H Dragon NaturallySpeaking is a widely used voice recognition system for computer use.

Duxbury Systems, Inc.
www.duxburysystems.com
(Formerly Raised Dot Computing, Inc.)
270 Littleton Rd., Unit 6
Westford, MA 01886-3523
978-692-3000
Fax 978-692-7912
caryn@duxsys.com
Duxbury's primary product is a Braille translator/word processor for the PC called MegaDots. The company also sells Beginner Braille, a system to custom teach Braille.

EMAC SPEAK
emacspeak.sourceforge.net
Contact: T. V. Raman
raman@users.sourceforge.net
This free speech interface allows blind and visually impaired users to interact with a computer. especially for web and Internet use. Also compatible with Linux and IBM ViaVoice Outloud, it is available on the Internet.

Enabling Technologies Co.
www.brailler.com
1601 Northeast Braille Place
Jensen Beach, FL 34957
800-777-3687 (U.S. only), 561-225-3687
Fax 800-950-3687 (U.S. only), 561-225-3299
enabling@brailler.com

Enabling Technologies provides an IBM-based Braille graphics package, ET Graphics, which can import images from paint programs using formats such as PCX and TIF. The company also manufactures a complete line of Braille embossers, from personal embossers to high-production machines.

Freedom Scientific
www.freedomscientific.com
Vision Resources Group
11800 31st Ct., North
St. Petersburg, FL 33716
800-444-4443, 727-803-8000
Fax 727-803-8001
Sales@freedomscientific.com

Freedom Scientific emerged as the largest U.S. manufacturer of software and hardware for people with vision impairments when it was formed by the merger of Blaize Engineering, Henter-Joyce, and Arkenstone in early 2000. Products include the JAWS screen reader, MAGic screen magnification with speech, Connect Outloud web access, note takers, Braille embossers and displays, and Open Book scanning software.

Learning Systems Group
www.arkenstone.org/wynn/index.htm
(Formerly Arkenstone)
NASA Ames Moffett Complex
Building 23
P.O. Box 215
Moffett Field, CA 94035-0215
888-223-3344, 650-603-8877
Fax 650-603-8871
WYNN@arkenstone.org

The WYNN reading assistance system is available for students with learning disabilities and those who have difficulty reading.

Human Ware, Inc.
www.humanware.com
6245 King Rd.
Loomis, CA 95650

800-722-3393, 916-652-7253
Fax 916-652-7296
info@humanware.com

Systems integration is provided for blind and visually impaired computer users, with screen access systems, refreshable Braille displays, Braille embossers, Braille translation software, Braille note takers, screen magnification software, and closed-circuit TV (electronic magnifiers for people with low vision).

IBM Accessibility Center
www-3.ibm.com/able
11400 Burnet Rd.
Austin, TX 78758
800-426-4832
Fax 512-838-0070
TTY 800-426-4833
snsinfo@us.ibm.com

The center provides free information and guides on the use of personal computers, as well as a series of IBM products for persons with disabilities in the following areas: vision, speech/hearing, mobility, education, and cognitive/dyslexia. The web site includes a newsletter and suggestions for how human resources personnel can increase the participation of persons with disabilities. Information about ViaVoice, IBM's speech recognition software, and Homepage reader, a screen reader for the Internet, is available from the web site or retailers carrying IBM products.

Kurzweil Educational Systems Group
www.lhsl.com/learning
Lernout & Hauspie Speech Products
52 Third Ave.
Burlington, MA 01803
781-203-5000, 800-894-5374
Fax 781-238-0986
customer.service@lhsl.com

Kurzweil systems read scanned or electronic text aloud using synthetic speech (L&H RealSpeak). Words are highlighted in contrast as they are spoken.

LS & S Group, Inc.
P.O. Box 673
Northbrook, IL 60065
800-468-4789
Fax 847-498-1482
TTY 800-317-8533

lssgrp@aol.com

This company publishes a catalog of instruments and devices for those with disabilities. They carry a selection of keyboard options and several software choices for screen reading and enlargement or voice input. There are also signaling systems that can attach flashing lights or vibrating devices to electronic equipment.

Microsoft's Accessibility Features

www.microsoft.com/enable

Accessibility features built into Microsoft products such as Windows and MS Word are described.

National Center on Accessible Information Technology in Education

www.washington.edu/accessit

Center on Human Development & Disability, University of Washington

Box 357920

Seattle, WA 98195-7920

Tel/TTY 866-968-2223, 206-616-2223

Fax 206-221-4171

accessit@u.washington.edu

The center develops and disseminates materials, training, and technical assistance to increase the access of individuals with disabilities to information technology in the educational setting. The project addresses accessibility issues of accommodations related to web pages, instructional software and documentation, and office equipment and telephones.

Prentke Romich Co.

www.prentrom.com/index.html

1022 Heyl Rd.

Wooster, OH 44691

800-262-1984, 330-262-1984

Fax 330-263-4829

info@prentrom.com

The company, which specializes in augmentative communication (speech output) devices, offers computer access products and other assistive technology. In addition, it reportedly makes software that allows the use of chemical drawing software (such as Chem Draw) via voice access, without the need for hands on the keyboard.

SCI—SOLUTIONS

http://people.a2000.nl/gnijhuis/spinal/spinal-comp.html

This site describes hardware and software options for hands-free

use of the computer. Product names are linked to manufacturers' web sites.

Telesensory
www.telesensory.com
520 Almanor Ave.
Sunnyvale, CA 94086
800-804-8004, 408-616-8700
Fax 408-616-8719
info@telesensory.com

Telesensory manufactures video magnifiers (CCTVs), scanners (OCR), and screen magnification products for people who are blind or vision-impaired. Telesensory is a Xerox strategic partner serving those with visual needs.

Trace Research and Development Center
www.trace.wisc.edu
University of Wisconsin–Madison
5901 Research Park Blvd.
Madison, WI 53719-1252
608-262-6966
TTY 608-263-5408
Fax 608-262-8848
web@trace.wisc.edu

Trace works to make information technologies such as computers and kiosks accessible to as diverse a population as possible. By working with the computer industry, Trace has successfully transferred research on computer accessibility; most major operating systems on computers have features from the Trace Center built into them, which make them more versatile and accessible to a wider range of users. Information on subjects such as universal design, computer access, and assistive technology include the *Trace Resourcebook: Assistive Technologies for Communication, Control and Computer Access* (1997 ed.) by P. A. Borden, J. L. Lubich, and G. C. Vanderheiden; and the Co-Net CD ROM (10th ed.), which contains a variety of accessible databases such as Abledata and Rehabdata, which can be run on either a Mac or PC platform. A second CD, A Taste of the Web, includes web sites with interesting and accessible disability-related information and links.

Media and communication technology

Artificial Language Laboratory
www.msu.edu/~artlang

Michigan State University
405 Computer Center
East Lansing, MI 48824-1042
517-353-0870
Fax 517-353-4766
Contact: Dr. John Eulenberg, Director
artlang@pilot.msu.edu

The Artificial Language Laboratory publishes *Communication Outlook,* an international quarterly for individuals interested in the application of technology to the needs of persons with communication impairments due to neurological, sensory, or neuromuscular conditions.

The Caption Center
main.wgbh.org/wgbh/pages/captioncenter/
(See WGBH Media Access Group, this section.)

Center for Applied Special Technology
www.cast.org
39 Cross St., Ste. 201
Peabody, MA 01960
978-531-8555
Fax 978-531-0192
TTY 978-538-3110
cast@cast.org

CAST provides research and support for "Universal Design for Learning," a system that uses technology to make curricula more accessible to all students, including those with disabilities.

Computers to Help People, Inc.
www.chpi.org
825 East Johnson
Madison, WI 53703

CHPI is a private, nonprofit organization that provides books on science and math in Braille and e-text on a worldwide basis.

National Center for Accessible Media
See WGBH Media Access Group, this section.

National Library Service for the Blind and Physically Handicapped
www.loc.gov/nls
The Library of Congress
1291 Taylor St., NW
Washington, DC 20542

202-707-5100

NLS administers a free library program of Braille and recorded materials to people who are unable to use standard print materials. A network of cooperating libraries circulates materials to borrowers by postage-free mail. To find the library in your state, go to www.loc.gov/nls/reference/directories/address.html or contact the NLS or your local public library.

Prentke Romich Co.
www.prentrom.com/index.html
See entry under Accessible Information Technology.

Recording for the Blind and Dyslexic
www.rfbd.org
20 Roszel Rd.
Princeton, NJ 08540
800-221-4792, 609-452-0606
Fax 609-520-7990

RFB&D provides recorded educational textbooks for kindergarten to the postsecondary level. Currently 83,000 titles are available; other titles are recorded upon request. Digital audio textbooks on CD are gradually being made available. Electronic text versions of some technical books, including computer manuals, are available for a nominal fee. People with documented visual impairments, learning disabilities, or other physical disabilities that limit or prevent the use of standard print materials may use this service after paying a $50 registration fee and a $25 membership fee; the materials are on loan.

Computerized Books for the Blind (CBFB) merged with RFB&D in 1991. For further information on available titles, call the RFB&D reference library at 609-452-0606.

Synapse Adaptive
www.synapseadaptive.com
3095 Kerner Blvd., Ste. S
San Rafael, CA 94901
415-455-9700
Fax 415-455-9801
888-285-9988 (order toll-free)
info@synapseadaptive.com

SA is a commercial source of access and productivity tools, including speech recognition, augmentative communication, and learning tools, vision products, ergonomic furniture and apparatus, and information.

Telesensory
www.telesensory.com

(See entry under Accessible Information Technology.)

The Texas Text Exchange
tte.tamu.edu
tte@stulife2.tamu.edu

Adaptive Technology Services
tte.tamu.edu
Hart Hall, Ramp B, MS 1257
Texas A&M University
College Station, TX 77843-1257
979-845-0390
Fax 979-458-1214
Contact: David Sweeney
tte@stulife2.tamu.edu

TTE is a consortium of disability service providers who share electronic texts (e-texts) with one another. These e-texts are used exclusively to accommodate qualified students with disabilities. The TTE also provides information related to the creation and use of e-texts.

WGBH Media Access Group, WGBH Educational Foundation
access.wgbh.org
125 Western Ave.
Boston, MA 02134
617-300-3400
Fax 617-300-1035
access@wgbh.org

Boston-based public broadcaster WGBH formed the Media Access Group to serve people who are deaf, hard of hearing, blind, or visually impaired: a combined audience of 34 million Americans. The new unit consolidates WGBH's two nonprofit access service departments: The Caption Center, the world's first captioning agency, founded in 1972 to make television, film, and video accessible to deaf and hard-of-hearing viewers, and Descriptive Video Service (DVS), which has made these forms of media more accessible to blind and visually impaired audiences since 1990. DVS also has a research and development entity, the CPB/WGBH National Center for Accessible Media, which is devoted to increasing access to existing and emerging technologies.

Other equipment and assistive technology

ABLEDATA
www.abledata.com
8630 Fenton St., Ste. 930

Silver Spring, MD 20910
800-227-0216
TTY 301-608-8912
Fax 301-608-8958

The ABLEDATA database contains information on more than 18,000 assistive technology products, from white canes to voice output programs. The database, funded by the U.S. Department of Education's National Institute on Disability and Rehabilitation Research, contains detailed descriptions of each product, including price and company information.

Rehabilitation Engineering & Assistive Technology Society of North America
www.resna.org
1700 N. Moore St., Ste. 1540
Arlington, VA 22209-1903
703-524-6686
Fax 703-524-6630
TTY 703-524-6639
info@resna.org

RESNA is "an interdisciplinary association of people with a common interest in technology and disability." RESNA sponsors a Technical Assistance Project that supports state TA project programs and produces several publications, including the *Assistive Technology* journal, wheelchair standards, a statement on assistive technology, and guides for choosing the right AT and alternative computer access. RESNA has an annual conference in June that covers a wide range of assistive technologies, products, research, and policy. Proceedings are published and are available from past conferences.

Sargent-Welch Corp.
www.sargentwelch.com
P.O. Box 5229
Buffalo Grove, IL 60089-5229
800-727-4368, 847-465-7510
Fax 800-676-2540
Contact: Ray Kufeldt, Bids and Quotes Manager

Sargent-Welch, part of VWR Scientific Products, is a dealer handling instruments such as spectrophotometers, pH meters, Ohaus balances, and interfacing systems for data collection. Also available are video display systems for microscopy or small-scale experiments. All of the instruments can be used with large format displays.

Science Products for the Blind
Box 888
Southeastern, PA 19399
800-888-7400

Products such as calculators, meters with talking output for visually impaired persons, and a variety of magnifiers are available. Staff have extensive experience in the fields of digital voice technology and equipment adaptation. Call to order a catalog or to discuss adaptation needs.

Technical Assistance Program
www.usdoj.gov/crt/ada/taprog.htm
(See Department of Justice ADA Technical Assistance Program.)

Technical Assistance Project
www.resna.org/taproject
1700 N. Moore St., Ste. 1540
Arlington, VA 22209-1903
703-524-6686
TTY 703-524-6639
Fax 703-524-6630
resnaTA@resna.org

A network of 56 projects located in each state and territory provides information on assistive technology. The programs of these centers vary but may include information centers, assistive technology loan closets, and purchasing loan programs. They can also refer people to local assistive technology resources.

UN-SCAN-IT and UN-SCAN-IT gel
Silk Scientific, Inc.
P.O. Box 533
Orem, UT 84059
801-377-6978
Fax 801-378-5474
jesilk@silkscientific.com

UN-SCAN-IT and UN-SCAN-IT gel digitize graphs and gels, respectively. The software, available in both Windows and Macintosh platforms, produces data in ASCII format for export to other programs.

Additional resources by disability group

Blindness/visual impairments

(See also Media and Communication.)

American Foundation for the Blind
www.afb.org
11 Penn Plaza, Ste. 300
New York, NY 10001
800-AFB LINE (232-5463), 212-502-7600
Fax 212-502-7777
afbinfo@afb.net

American Printing House for the Blind, Inc.
www.aph.org
1839 Frankfort Ave.
P.O. Box 6085
Louisville, KY 40206-0085
800-223-1839, 502-895-2405
Fax 502-899-2274
cs@aph.org

This organization offers textbooks for students in grades K–12 in Braille and enlarged print, preschool packets, and other educational products.

gh
www.gh7.com
gh llc
3000 Kent Ave., Ste. E2-201
West Lafayette, IN 47906
765-775-3776
info@ghbraille.com

Braille translation, embossing services, and tactile graphics are provided, with an emphasis on fast turnaround time.

National Braille Association
www.nationalbraille.org/Nba-Services.htm
3 Townline Circle
Rochester, NY 14623-2513
716-427-8260
Fax 716-427-0263

NBA serves as a clearinghouse for the exchange of ideas and suggestions for the improvement of Braille transcribing techniques. NBA publishes guidelines for standards of print to Braille formats; offers continuing education seminars; and conducts workshops for Braille transcribers, tactile illustrators, production workers, and others who prepare reading matter for the visually impaired. The association maintains the Braille Book Bank of college-level textbooks, technical materials, music, and items of a more general nature. The Braille Technical Tables Bank is a collection of stan-

dard tables used in math, computer science, statistics, chemistry, physics, and finance.

National Federation of the Blind
www.nfb.org
1800 Johnson St.
Baltimore, MD 21230
410-659-9314
Contacts: Marc Maurer, President; Lorraine Rovig, Director, Job Opportunities for the Blind (JOB)
nfb@nfb.org

This nation's largest self-help organization for blind Americans offers scientists who lose their sight free consultation and networking on any problem related to blindness through its professional Science and Engineering Division and educational materials (Web page, print, alternative formats). Data are available on procedures for laboratories; researching and writing; locating or transcribing texts; adaptive equipment for scientific specialties; management techniques for office, classroom, or professional conferences; and assistance in job searching through its JOB program.

Sensory Access Foundation
www.sensoryaccess.com
1142 West Evelyn Ave.
Sunnyvale, CA 94086
408-245-7330
Fax 408-245-3762
TTY 408-245-1001

SAF assists individuals who are blind or visually impaired in obtaining suitable employment or maintaining an existing job that is at risk because of visual problems affecting an employee's ability to do the job. SAF provides workplace accommodations (specialized hardware and software) that allow employees to do their jobs. SAF's employment services include job preparation and placement, access technology evaluations, employer/employee education, ADA consultation, equipment loan for on the job, individualized access technology training, installation and configuration of systems, and the work incentive program.

Deaf and hearing-impaired

Alexander Graham Bell Association for the Deaf and Hard of Hearing
www.agbell.org
3417 Volta Place, NW

Washington, DC 20007-2778
202-337-5220
TTY 202-337-5221
Fax 202-337-8314
info@agbell.org

Started in 1890 by Alexander Graham Bell, this is a membership organization and source of information on hearing loss and the auditory approach. The foundation also offers financial aid to qualified students.

Gallaudet University
www.gallaudet.edu
800 Florida Ave., NE
Washington, DC 20002-3695
Tel/TTY 202-651-5000
Public Relations: public.relations@gallaudet.edu
Undergraduate Admissions, Tel/TTY 800-995-0550
Undergraduate Admissions, TTY 202-651-5114
Undergraduate Admissions: Admissions.Office@Gallaudet.edu
Graduate Admissions: Tel/TTY 800-995-0513

Gallaudet University serves as a comprehensive, multipurpose institution of higher education for citizens of the United States and of the world who are deaf or hard of hearing. In addition to its undergraduate and graduate academic programs, the university also offers national demonstration elementary and secondary education programs.

Technology Access Program
http://tap.gallaudet.edu/
Department of Communication Arts
Tel/TTY 202-651-5257
Fax 202-651-5476

Gallaudet University's Technology Access Program (TAP) is a research group focusing on technologies and services that eliminate communication barriers traditionally faced by deaf and hard of hearing people. The TAP currently receives primary support from the National Institute on Disability and Rehabilitation Research and Gallaudet University's Department of Communication Arts.

National Technical Institute for the Deaf
ntidweb.rit.edu/
Rochester Institute of Technology
Department of Recruitment and Admissions
52 Lomb Memorial Dr.
Rochester, NY 14623-5604

Tel/TTY 716-475-6700
Fax 716-475-2696
NTIDMC@rit.edu
place4u@rit.edu (for NTID admissions questions)

NTID, one of seven RIT colleges, is the world's first and largest technological college for deaf students. NTID represents the first concentrated effort to educate large numbers of deaf students within a college campus planned principally for hearing students. Students can benefit from nearly 200 technical and professional courses of study offered by NTID and RIT's colleges of Applied Science and Technology, Business, Engineering, Imaging Arts and Sciences, Liberal Arts, and Science.

Registry of Interpreters for the Deaf, Inc.
www.rid.org
333 Commerce St.
Alexandria, VA 22314
703-838-0030
TTY 703-838-0459
Fax 703-838-0454
pr@rid.org

The Registry promotes professional, qualified, and competent interpreters for both deaf and hearing consumers by administering the National Testing System and can provide a list of interpreting agencies by state. The web site contains a searchable database for finding local interpreters.

Self-Help for Hard-of-Hearing People
7910 Woodmont Ave., Ste. 1200
Bethesda, MD 20814
301-657-2248
Fax 301-913-9413
TTY 301-657-2249
National@shhh.org

Sign Language Associates, Inc.
www.signlanguage.com
11160 Veirs Mill Rd., Ste. 506
Silver Spring, MD 20902
Tel/TTY 301-946-9710
Fax 301-946-9685
sla@signlanguage.com

This organization is one of many in the Washington, DC, area that provide interpreters for meetings and other functions. Many of

them (including Sign Language Associates) make arrangements for interpreters in other parts of the country as well.

Communication and learning disabilities

(See also Media and Communication.)

Artificial Language Laboratory
www.msu.edu/~artlang
Michigan State University
405 Computer Center
East Lansing, MI 48824-1042
517-353-0870
Fax 517-353-4766
Contact: Dr. John Eulenberg, Director
artlang@pilot.msu.edu

The Artificial Language Laboratory publishes *Communication Outlook*, an international quarterly for individuals interested in the application of technology to the needs of persons with communication impairments caused by neurological, sensory, or neuromuscular conditions.

Central Auditory Processing Disorder
www.theshop.net/campbell/central.htm
www.nidcd.nih.gov/health/pubs_vsl/auditory.htm
(See also ldonline, this section.)

Children and Adults with Attention Deficit/Hyperactivity Disorders
www.chadd.org
CHADD
8181 Professional Place, Ste. 201
Landover, MD 20785
800-233-4050, 301-306-7070
Fax 301-306-7090

Founded in 1987 by a group of concerned parents, CHADD works to improve the lives of people with attention-deficit/hyperactivity disorder through education, advocacy, and support. Working closely with leaders in the field of AD/HD research, diagnosis and treatment, CHADD offers its members and the public information they can trust.

The International Dyslexia Association
www.interdys.org
8600 LaSalle Rd.
Chester Building, #382

Baltimore, MD 21286-2044
800-222-3123, 410-296-0232
Fax 410-321-5069
info@interdys.org

The society is committed to sharing up-to-date information about workplace accommodations and advances in the field of dyslexia through an extensive list of reprints and other readings, including college and career selections.

K & W Guide to Colleges for the Learning Disabled, 5th Ed.
By Marybeth Kravets and I. F. Wax, Princeton Review (Aug 1, 1999), 700 pp, ISBN: 0375754148.

Landmark College
www.landmarkcollege.org
P.O. Box 820
River Rd. South
Putney, VT 05346
802-387-4767
Fax 802-387-6880

According to its web site, "Landmark College is the only fully accredited college in the country designed exclusively for students of average to superior intellectual potential with dyslexia, attention deficit disorder, or specific learning disabilities." Landmark offers extensive tutoring to all students and teaches learning skills with the goal of success without the need for oral exams, taped books, or other accommodations.

Learning Disabilites On-Line
www.ldonline.org

This web site for families and teachers of students with disabilities contains numerous links to resources. It is also the official Internet source for publications of the National Joint Committee on Learning Disabilities.

Louisburg College
www.louisburg.edu
501 North Main St.
Louisburg, NC 27549
919-497-3236
Contact: Learning Partners, Learning Services Division
jwalden@louisburg.edu

Louisburg College is a two-year college that strives for a student body of whom at least one-third are students with learning disabilities. The college has an additional fee-based learning support and

tutoring service for students with learning disabilities, ADD, or ADHD. Students receive intensive tutoring from specialists who hold master's degrees in special education with concentration in learning disabilities and extensive teaching experience and who also serve as their students' academic advisors. Tutoring is provided in course content and in strategies for studying, test taking, planning, and organization.

National Center for Learning Disabilities
www.ncld.org
381 Park Ave. South, Ste. 1401
New York, NY 10016
212-545-7510, 888-575-7373
Fax 212-545-9665

As a member organization of the National Joint Committee on Learning Disabilities, NCLD is devoted to increasing opportunities for all individuals with learning disabilities to achieve their potential. NCLD accomplishes this mission by increasing public awareness and understanding of learning disabilities, conducting educational programs and services that promote research-based knowledge, and providing national leadership in shaping public policy.

National Joint Committee on Learning Disabilities
www.ldonline.org/njcld

This group, composed of representatives from 10 member organizations, provides interdisciplinary review of topics related to learning disabilities and releases consensus statements to clarify these issues. Member organizations include the American Speech-Language-Hearing-Association, the Association for Higher Education and Disability, the Council for Learning Disabilities, the Division for Children's Communication Development, the Division for Learning Disabilities Council for Exceptional Children, the International Dyslexia Association, the Learning Disabilities Association of America, the National Association of School Psychologists, and the National Center for Learning Disabilities.

Schwab Foundation for Learning
www.SchwabLearning.org

This web site offers more than 200 pages of content on learning differences and disabilities. Publications and fact sheets for families of students with learning disabilities can be downloaded.

Teaching Adolescents with LD: Strategies and Methods
By Donald D. Deschler, Edwin S. Ellis, and B. Keith Lenz, Love Publishing Co.: Denver, 1996.

National Spinal Cord Injury Association
www.spinalcord.org
6701 Democracy Blvd., Ste. 300, #300-9
Bethesda, MD 20817
301-588-6959
Fax 301-588-9414
Resource and Referral Service Helpline 800-526-3456
resource@spinalcord.org

The primary mission of NSCIA is to "educate, motivate and empower survivors of spinal cord injury and disease ... to achieve and maintain higher levels of independence and personal fulfillment." In addition to the toll-free helpline, the NSCIA provides information on rehabilitation and resources to improve the quality of life for those affected by spinal cord injury and disease.

UCP National (United Cerebral Palsy)
www.ucpa.org
1660 L St., NW, Ste. 700
Washington, DC 20036
800-872-5827, 202-776-0406
TTY 202-973-7197

UCP is one of the major disability-related charities in America, promoting full inclusion of people with disabilities in every aspect of life. UCP also provides direct services to people with disabilities and their families through local affiliates.

Architecture and universal design

American Institute of Architects
1735 New York Ave., NW
Washington, DC 20006
800-AIA-3837 (232-2387)
Fax 202-626-7547

AIA makes referrals to architects who can design living and work environments for persons with disabilities.

Association of Higher Education Facilities Officers
www.appa.org
(Formerly Association of Physical Plant Managers, APPA)
APPA
1643 Prince St.
Alexandria, VA 22314-2818
703-684-1446

Fax 703-549-2772
infor@appa.org

APPA publishes *Removing the Barriers: Accessibility Guidelines and Specifications*, ISBN 0-913359-59-9 (1991), to help colleges and universities comply with the ADA. The book offers detailed information on the requirements for facilities to conform with the act.

Blake-Drucker Architects
www.bdarch.com
Bonnie Blake-Drucker, AIA
Blake-Drucker Architects
111 Myrtle St., 201a
Oakland, CA 94607
510-268-8310
Fax 510-832-8393
labs@bdarch.com

This firm, which specializes in universal design, has designed a prototypical accessible chemistry workstation and an adjustable fume hood with numerous accessibility features.

The Center for Universal Design
www.design.ncsu.edu/cud
NC State University
School of Design
Box 8613
219 Oberlin Rd. (delivery address)
Raleigh, NC 27695-8613
Tel/TTY 919-515-3082
Fax 919-515-3023
InfoLine: 800-647-6777
Contact for technical assistance: Sally Haile
cud@ncsu.edu

The Center for Universal Design is a national research, information, and technical assistance center that evaluates, develops, and promotes universal design in housing, public and commercial facilities, and related products.

DO-IT
www.washington.edu/doit/Resources/technology.html
(See also main entry under Professional Associations Resources in Science and Engineering for Persons with Disabilities.)

Patton Educational Products Co.
www.pepcosciencetables.com

10206 Rosewood
Overland Park, KS 66207
Tel and Fax 800-898-4873
pepcosciencetables@aol.com

PEPCO makes a durable science laboratory table with enough clearance underneath to be accessible for most wheelchairs.

Universal Design Newsletter
www.universaldesign.com/newsletter.html

This quarterly publication provides up-to-date information on accessibility concerns. Subscribers are informed about new developments, issues and actions, and cost-effective solutions to everyday accessibility problems. Topics include accessible design, compliance with the ADA, and universal design. Each issue contains technical information from national experts. Columns include FedWatch, Accessibility Tips, New Products, New Media, and a Calendar of Events.

Selected sources of accessible equipment

Fume hoods
www.malf.com/ada.htm
www.lbdinc.com/fume.html#ADA
www.kewaunee.com/f_config.shtml
www.labconco.com/products/fume_hoods/hood_xl_hopec.html

Shower/eyewash
www.hawsco.com/7752wc.htm

Sinks
(less deep for use in accessible locations)
Stainless steel
Just Sinks, Inc., www.justmfg.com/ada.htm
Elkay, www.elkay.com/ResidentialSinks/ADA.html
Polypropylene
www.orionfittings.com/PriceGuide/16.htm
Epoxy resin
www.labtops.com/Products/DropIn%20Sinks.asp
www.durcon.com/skrecsti.htm

Tables
Adjustable height
www.grafco.com/products_adjustable_tables.html
www.closetmasters.com/Computer_desks/Computer_desks_height_adjustable_tables/height_adjustable_tables.htm

www.assis-tech.com/Products/products.html
www.laboratory-furniture-fume-hoods.com/Americans-with-Disabilities-Act.htm
Fixed height, laboratory; shallow lip for wheelchair clearance; also custom science tables
www.pepcosciencetables.com

Adaptive Living
Vanetten@adelphia.net
561-781-6153
Fax 561-781-9179
Contact: Robert VanEtten
www.adaptive-living.com

Adaptive Living is a commercial engineering firm that, through the use of technology, assists individuals with disabilities to achieve independence at home, at school, on the job, in commercial facilities and places of public accommodation, and when using public or private transportation. The technology includes computer hardware and software, environmental controls, augmentative communication aids, seating and mobility aids, transportation vehicles, and lifts and elevators.

Fisher Hamilton Inc.
www.fisherhamilton.com
1316 18th St., Box 137
Two Rivers, WI 54241
920-793-1121
Fax 920-794-6478
Contact: Jim Thiel, Marketing Manager
Note: Fisher-Hamilton is a subsidiary of Fisher Scientific

Fisher Hamilton manufactures a very adaptable line of mobile, adjustable-height casework that meets ADA requirements. They produce other adjustable-height laboratory workstations and furniture that provide wheelchair access and meet ADA requirements, including a fume hood with a lip that prevents liquids from flowing over the front edge, and an accessible sink cabinet.

Mentoring, internships, and funding

American Chemical Society
chemistry.org
(See main entry under Professional Association Resources in Science and Engineering for Persons with Disabilities.)

DO-IT
(See also main entry under Professional Association Resources in

Science and Engineering for Persons with Disabilities.)

DO-IT has volunteer mentors, ambassadors, and others who share their experiences and insight to support and encourage students with disabilities pursuing college and careers; see www.washington.edu/doit/People and www.washington.edu/doit/Brochures/Technology/doors.html. "Funding Strategies for Students with Disabilities" is one part of the College Transition and Access page.

ENTRY POINT!
www.entrypoint.org
(See AAAS entry under Professional Association Resources in Science and Engineering for Persons with Disabilities.)

The ERIC Clearinghouse on Disabilities and Gifted Education
ericec.org/index.html
This organization publishes a biennial guide and annual reports on financial aid for students with disabilities.
(See main entry under Science Education.)

National Institutes of Health
www.nih.gov
Grants Information
(grants.nih.gov/training/disabilities.htm)
Division of Extramural Outreach and Information Resources
Office of Extramural Research
National Institutes of Health
6701 Rockledge Dr., MSC 7910
Bethesda, MD 20892-7910
301-435-0714
GrantsInfo@nih.gov

NIH offers predoctoral fellowships for students with disabilities and research supplements for students with disabilities from high school through the postdoctoral level. The NIH research supplements for individuals with disabilities are described at grants.nih.gov/grants/guide/pa-files/PA-01-080.html or request PA number PA 01-080. NIH also funds research of benefit to persons with disabilities, which is described at www.nih.gov.

National Science Foundation
www.nsf.gov
www.ehr.nsf.gov/hrd/ppd.asp
Directorate for Education and Human Resources
Program for Persons with Disabilities
4201 Wilson Blvd., Ste. 815

Arlington, VA 22230
703-292-4684
Fax 703-292-9018

The Program for Persons with Disabilities solicits funding applications for projects that recruit and train students with disabilities for careers in science, mathematics, and engineering.

The Facilitation Awards for Scientists and Engineers with Disabilities program offers awardees of NSF grants and contracts the possibility of obtaining supplemental funds to provide research staff with disabilities the equipment or services needed to be fully productive in NSF-supported activities. Applicants should contact their primary program officer.

RASEM
rasem.nmsu.edu
Regional Alliance of Science, Engineering, & Mathematics
New Mexico State University
P.O. Box 30001/Dept. 3CE
Las Cruces, NM 88003
888-646-6051, 505-646-1395
Fax 505-646-6049
TTY 505-646-8020
Contact: Ed Misquez
emisquez@nmsu.edu

RASEM provides mentorships, stipends, and summer programs at partner institutions for students with disabilities, from elementary through graduate school.

Careers and employment

Cornell University Program on Employment and Disability
www.ilr.cornell.edu/extension/ped/index.html
School of Industrial and Labor Relations
106 ILR Extension
Ithaca, NY 14853-3901
607-255-7727
TTY 607-255-2891
ilr_ped@cornell.edu

The Program on Employment and Disability, housed within the Industrial and Labor Relations School at Cornell University, conducts research on and provides continuing education in and technical assistance for many aspects of disability in the workplace.

Access for All
www.ilr.cornell.edu/PED/accessforall

This part of Cornell University's School of Industrial and Labor Relations web site is for employers and human resource professionals. The site gives examples of general workplace accommodations, primarily for people with hearing or vision disabilities. It also contains discussions of management concerns and information about hiring persons with disabilities.

Job Accommodation Network
janweb.icdi.wvu.edu\
West Virginia University
P.O. Box 6080
Morgantown, WV 26506-6080
Tel/TTY 800-526-7234
Fax 304-293-5407
Contact: Barbara Judy
jan@jan.icdi.wvu.edu

JAN is a federally funded agency that provides information to employers about adaptations for work environments. Be prepared to explain the specific details of your situation.

Job-Hunting Tips for the So-Called Handicapped or People Who Have Disabilities, 2nd Ed.
By Richard Nelson Bolles and Dale Susan Brown. ISBN: 1580081959, 2001. This is a supplement to the popular job-hunting handbook, *What Color is Your Parachute?* To order, contact Ten Speed Press, P.O. Box 7123, Berkeley, CA 94707; www.tenspeed.com.

Job Strategies for People with Disabilities
By Melanie Astaire Witt, 1992. Advice is offered on job hunting, résumé preparation, the job interview, career planning, your rights in the workplace under the ADA, when to disclose your disability to a potential employer, and other topics. Petersons Guides; ISBN: 1560791438.

Office of Disability Employment Policy
www.dol.gov/dol/odep
(includes former President's Committee on Employment of People with Disabilities)
U.S. Department of Labor
1331 F St., NW, Ste. 300
Washington, DC 20004
202-376-6200
Fax 202-376-6219
TTY 202-376-6205

In the FY 2001 budget, Congress approved a new ODEP for the

Department of Labor. Programs and staff of the former President's Committee on Employment of People with Disabilities have been integrated into this new office. ODEP's mission will be to bring a heightened and permanent long-term focus to the goal of increasing employment of persons with disabilities. This will be achieved through policy analysis, technical assistance, and development of best practices, as well as outreach, education, constituent services, and promoting ODEP's mission among employers.

President's Committee on Employment of People with Disabilities
(See Office of Disability Employment Policy, above.)

Rehabilitation Services Administration
(See OSERS entry under Resources and Organizations with a Focus on Disability.)

Successful Job Search Strategies for the Disabled: Understanding the ADA
By Jeffrey Allen, 1994. To order, contact John Wiley & Sons, Inc., 605 Third Ave., New York, NY 10158.

Resources and organizations with a focus on disability

National Council on Disability
www.ncd.gov
1331 F St., NW, Ste. 1050
Washington, DC 20004-1107
202-272-2004
Fax 202-272-2022
TTY 202-272-2074

This independent federal agency is charged with addressing, analyzing, and making recommendations on issues of public policy that affect people with disabilities. The agency publishes the *NCD Bulletin.*

National Easter Seal Society
www.easter-seals.org
230 W. Monroe, Ste. 1800
Chicago, IL 60606
800-221-6827, 312-726-6200
Fax 312-726-1494
TTY 312-726-4258
info@easter-seals.org

This organization provides information and referral services related to assistive technology and will direct persons to appropriate Easter Seal Society affiliates.

National Information Center for Children and Youth with Disabilities
www.nichcy.org
P.O. Box 1492
Washington, DC 20013
Tel/TTY 800-695-0285, 202-844-8200
Fax 202-884-8441
nichcy@aed.org

NICHCY is the national information source for disabilities and disability-related issues for families, educators, and professionals with a focus on children and youth (birth to age 22).

National Organization on Disability
www.nod.org
910 16th St., NW, Ste. 600
Washington, DC 20006
202-293-5960
Fax 202-293-7999
TTY 202-293-5968
ability@nod.org

NOD promotes the full and equal participation of America's 54 million men, women, and children with disabilities in all aspects of life. NOD was founded as an outgrowth of the United Nations Year of Disabled Persons. NOD is the only national network organization concerned with all disabilities, all age groups, and all disability issues. NOD's seven major programs are the Community Partnership Program, the National Organization Partnership Program, the CEO Council, the Start on Success Student Internship Program, the Religion and Disability Program, the Attitudinal Surveying Program, and the World Committee on Disability.

Office of Special Education and Rehabilitative Services
www.ed.gov/offices/OSERS
Department of Education
Switzer Building, Room 3132
Washington, DC 20202-2524
Tel/TTY 202-205-8241
Fax 202-401-2608

This federal agency answers questions about services and programs for individuals of all ages with disabilities. The agency has three components: the Office of Special Education Programs; the

Rehabilitation Services Administration, which oversees programs that help individuals with physical or mental disabilities to obtain employment; and the National Institute on Disability and Rehabilitation Research, which provides leadership and support for a comprehensive program of research related to the rehabilitation of individuals with disabilities.

Resources for Rehabilitation
www.rfr.org
33 Bedford St., Ste. 19A
Lexington, MA 02420
781-862-6455
Fax 781-861-7517
info@rfr.org

This organization publishes resource guides that enable individuals with disabilities and those who work with them to locate organizations, assistive technology, and publications that contribute to independence in the workplace and home. Publications cover the most prevalent disabilities and conditions, including visual impairment, hearing impairment, back pain, spinal cord injury, diabetes, multiple sclerosis, arthritis, and epilepsy. Titles include *Meeting the Needs of Employees with Disabilities* and *Resources for People with Disabilities and Chronic Conditions.* A multidisciplinary faculty is available to conduct custom-designed training programs, research projects, and evaluations.

World Institute on Disability
www.wid.org
510 16th St., Ste. 100
Oakland, CA 94612
510-763-4100
TTY 510-208-9496
Fax 510-763-4109
webpoobah@wid.org

This institute is a public policy center that conducts research, public education, and training; it also develops model programs related to disability. It deals with issues such as public transportation, employment, and health care.

Travel

Access Foundation for the Disabled
Box 69
Malverne, NY 11565-0069
1109 Linden St.

Valley Stream, NY 11580
516-568-2715

This nonprofit information clearinghouse for people with disabilities offers information on accessible travel in more than 150 countries and publishes a monthly newsletter available only on computer disk.

The Literate Traveller, Resources for Disabled Travellers
www.literatetraveller.com/disabled.html

This web page is a list of publications, travel agencies, and organizations related to travel for persons with disabilities.

Mobility International USA
www.miusa.org
P.O. Box 10767
Eugene, OR 97440
Tel/TDD: 541-343-1284
Fax 541-343-6812
info@miusa.org

An important part of MIUSA's mission is to ensure the inclusion of people with disabilities in international educational exchange programs. MIUSA manages the National Clearinghouse on Disability and Exchange. NCDE promotes the inclusion of people with disabilities in educational exchange programs and provides technical information to colleges, universities, and international exchange organizations on how to include people with disabilities in exchange programs. Many publications and videos are available from MIUSA, including *A World Awaits You (AWAY),* a journal of success in international exchange for people with disabilities.

Society for Accessible Travel and Hospitality
www.sath.org
347 5th Ave., Ste. 610
New York, NY 10016
212-447-7284
Fax 212-725-8253
Sathtravel@aol.com

Information for persons with disabilities traveling in the United States or internationally is available, along with *Open World* magazine.

Resources and information on disability regulations

Disability and Business Technical Assistance Centers
www.naric.com/search/pd/indextype.html (Click on Americans

with Disabilities Act Technical Assistance Programs.)
Tel/TTY 800-949-4232 (This number will automatically route the call to the DBTAC in the caller's region.)

A group of 10 regional centers that provide information and referral, technical assistance, training, and public awareness on ADA and related legislation. Funded by the National Institute on Disability and Rehabilitation Research.

U.S. Dept of Justice Guide to Disability Rights Laws
www.usdoj.gov/crt/ada/cguide.htm, ADA home page

U.S. Department of Justice Americans with Disabilities Act
www.usdoj.gov/crt/ada/adahom1.htm ADA home page

ADA Title I

Equal Employment Opportunity Commission
www.eeoc.gov
1801 L St., NW
Washington, DC 20507
To order publications, call 800-669-EEOC (800-669-3362)
For investigation queries, call 800-669-4000
Fax 513-489-8692
TTY 800-669-6820

EEOC develops regulations, provides training, and enforces the employment section of the ADA. Materials are available in a variety of formats. Guidance documents are published on this web site, for example, Notice number 915.002 (10/10/95) Enforcement Guidance: Preemployment Disability-Related Questions and Medical Examinations.

Job Accommodation Network
janweb.icdi.wvu.edu
(See Primary Resources in Science in Resources.)

Regulations, technical assistance, and enforcement for Titles II and III

U.S. Department of Justice: ADA Information Line
800-514-0301
TTY 800-514-0383

Disability Rights Section, Civil Rights Division
www.usdoj.gov/crt/ada/enforce.htm
P.O. Box 66738
Washington, DC 20035-6738
202-514-0301

TTY 800-514-0383

This organization enforces Titles II and III of the ADA (access to state and local governments, and public accommodations and commercial facilities, respectively). Technical assistance publications: www.usdoj.gov/crt/ada/publicat.htm, or order by phone.

Accessibility guidelines

United States Architectural and Transportation Barriers Compliance Board
www.access-board.gov
The Access Board
1331 F St., NW, Ste. 1000
Washington, DC 20004-1111
800-872-2253, 202-272-5434
Fax 202-272-5447
TTY 800-993-2822, 202-272-5449
info@access-board.gov

This federal agency was created under the Rehabilitation Act of 1973, as amended, with the primary mission of ensuring accessibility for people with disabilities under the Architectural Barriers Act of 1968, the ADA of 1990, and the Telecommunications Act of 1996. The agency offers training and technical assistance to individuals and organizations throughout the country on removing architectural, transportation, and communication barriers.

IDEA and the Rehabilitation Act of 1973

See also EDLAW and EASI for the text of the regulations. See ldonline and the Schwab foundation for additional plain language discussions of rights and responsibilities and IEPs.

The New IDEA Survival Guide
By Sabrina Holcomb with Ed Amundson and Patti Ralabate: National Education Association, 2000; home.nea.org/books/idea.

EDLAW, COPAA
www.edlaw.net
The web site includes both EDLAW, a resource center for attorneys, and COPAA, the Council of Parent Attorneys and Advocates, "an independent, nonprofit, tax-exempt organization of attorneys, advocates and parents established to improve the quality and quantity of legal assistance for parents of children with disabilities." Relevant laws are on the EDLAW web site, along with the text of some opinions clarifying implementation.

Office for Civil Rights
www.ed.gov/offices/OCR
U.S. Department of Education
Office for Civil Rights
Customer Service Team
Mary E. Switzer Building
330 C St., SW
Washington, DC 20202
800-421-3481
Fax 202-205-9862
TDD 877-521-2172
OCR@ed.gov

OCR enforces federal statutes that prohibit discrimination in educational programs and activities: Section 504 of the Rehabilitation Act of 1973 and Title II of the ADA of 1990. The office also enforces laws against discrimination on the basis of race, color, and national origin (Title VI of the Civil Rights Act of 1964), sex discrimination (Title IX of the Education Amendments of 1972), and age discrimination (Age Discrimination Act of 1975).

Office of Special Education Programs
www.ed.gov/offices/OSERS/OSEP
U.S. Department of Education
330 C St., SW, Room 3086
Washington, DC 20202
202-205-8824 (voice/relay)

This office has primary responsibility for administering IDEA and other programs and projects related to free public education for persons with disabilities from childhood through age 21. The office publishes an annual report to Congress on the implementation of IDEA and the *Guide to the Individualized Education Program* for educators, parents, and educational agencies.

Parent Advocacy Coalition for Educational Rights
www.pacer.org
8161 Normandale Blvd.
Minneapolis, MN 55437
952-838-9000
TTY 952-838-0190

Founded in 1977, the PACER Center was created by parents of children and youth with disabilities to help other parents and families facing similar challenges. The web site includes links to parent training and information centers and community groups in the United States.

Telecommunications and Information Technology (ADA Title IV, Telecommunications Act of 1996, and Section 508 of Rehabilitation Act of 1973)

Center for IT Accommodation
www.itpolicy.gsa.gov/cita
U.S. General Services Administration
1800 F St., NW
Room 1234, MKC
Washington, DC 20405-0001
202-501-4906
Fax 202-501-6269
TTY 202-501-2010

CITA provides information on Section 508 of the Rehabilitation Act of 1973, which establishes requirements for electronic and information technology developed, maintained, procured, or used by the federal government.

Federal Communications Commission
www.fcc.gov/cib/dro
445 12th St., SW
Washington, DC 20554
202-418-0190, 888-225-5322
TTY 888-835-5322
fccinfo@fcc.gov

Information about Telecommunications Relay Services, including news about rulings and a consumers guide, can be found at www.fcc.gov/cib/dro/trs.html.

Transportation (Title V)

Department of Transportation
www.dot.gov/accessibility/index.html
400 7th St., SW
Room 4107, C-75
Washington, DC 20590
202-366-4000
TTY 202-755-7687

Guidance Regarding Aviation Rules and Statutes, including disability issues
www.dot.gov/airconsumer/01-index.htm

Access for People with Disabilities to Airport Facilities
www.faa.gov/acr/access.htm

This site includes links to *New Horizons Information for the Air Traveler with a Disability,* instructions for filing a complaint, and commercial airline disability web sites. New Horizons, a consumer publication describing the Air Carrier Access Act of 1986, can be obtained directly at www.dot.gov/ airconsumer/horizons.htm or by contacting the Office of the Secretary at the Department of Transportation, 400 7th St., SW, Washington, DC 20590 or 800-659-6428.

References

(1) Stern, Virginia; Woods, Michael. *Roadmaps & Rampways: Profiles of Science and Engineering Students with Disabilities;* American Association for the Advancement of Science: Washington, DC, 2001.

(2) Henderson, C. *College Freshmen with Disabilities: A Biennial Statistical Profile;* American Council on Education: Washington, DC, 1999.

(3) National Science Foundation. *Women, Minorities, and Persons with Disabilities in Science and Engineering: 2000* (NSF-0327); Arlington, VA, 2000.

(4) Woods, M. *Working Chemists with Disabilities, Expanding Opportunities in Science;* Blumenkopf, T. A., et al., Eds.; American Chemical Society: Washington, DC, 1996; ISBN 0841235023.

(5) Lang, H. G.; Meath-Lang, B. *Deaf Persons in the Arts and Sciences: A Biographical Dictionary;* Greenwood Press: Westport, CT, 1995.

(6) Stern, V. W.; Summers, Laureen. *AAAS Resource Directory of Scientists and Engineers with Disabilities,* 3rd ed.; American Association for the Advancement of Science: Washington, DC, 1995; ISBN 0-87168-576-0.

(7) membership.acs.org/C/CWD/teaching/start.htm

(8) Bryan, Jenny. Laboratories for All: Children with Disabilities Are Out in the Cold When It Comes to Doing Science Experiments. A New Generation of Gadgets Is Now Bringing Them into the School Laboratory. *The New Scientist,* **1990,** *126* (1720), 47–51.

(9) Lang, H. G.; Propp, G. Science Education for Hearing Impaired Students: State of the Art. *American Annals of the Deaf,* **1982,** *127* (7), 860–869.

(10) National Science Foundation. *Women, Minorities, and Persons with Disabilities in Science and Engineering: 1994* (NSF 94-333); Arlington, VA, 1994.

(11) 20 U.S.C. citations from IDEA 1997; § 1412 (a)(5)(A).

(12) Crockett, J. B.; Kauffman, J. M. Taking inclusion back to its roots. *Educational Leadership,* **1998,** *56* (2), 74–77.

(13) Lipsky, D. K.; Gartner, A. Taking inclusion into the future. *Educational Leadership,* **1998,** *56* (2), 78–82.

(14) www.usdoj.gov/crt/ada/cguide.htm

(15) U.S. Department of Education, Office of Special Education and Rehabilitation Services. *To Assure the Free Appropriate Public Education of All Children with Disabilities; Individuals with Disabilities Education Act Section 618: 22nd Annual Report to Congress on the Implementation of the Individuals with Disabilities Education Act;* Washington, DC, 2000; www.ed.gov/offices/OSERS.

(16) www.rfbd.org

(17) www.loc.gov/nls

(18) Edman, Polly. *Tactile Graphics;* American Foundation for the Blind: New York, 1992.

(19) http://trace.wisc.edu/world/web/

(20) Jose, R. *Understanding Low Vision;* American Foundation for the Blind: New York, 1989.

(21) Corn, A., Koenig, A., Eds. *Foundations of Low Vision: Clinical and Functional Perspectives;* American Foundation for the Blind: New York, 1996.

(22) Gardner, L.; Corn, A. *Low Vision: Access to Print: Statements of Position;* Division for the Visually Handicapped, Council for Exceptional Children:

Reston, VA, 1991; pp 6–8.
(23) DeLucchi, L.; Malone, L. Science Activities for the Visually Impaired. In *A Teacher's Guide to the Special Educational Needs of the Blind and Visually Handicapped Children;* Mangold, S., Ed.; American Foundation for the Blind: New York, 1982.
(24) *Science Teaching in Inclusive Classrooms: Theory and Foundations* and *Science Teaching in Inclusive Classrooms: Models and Applications;* Stefanich, G. P., Ed.; Woolverton Printing: Iowa, 2001.
(25) Nemeth, Abraham. *Teaching Mathematics as a Blind Person.* Presentation to the Mathematical Association of America; Orlando, FL, Jan 10, 1996; www.rit.edu/~easi/easisem/nemeth1.htm; the paragraph "Let me now consider how a blind person receives his mathematical training" begins the description of the blind student's experience.
(26) Wells, C. A *Handbook of Mathematical Discourse;* Case Western Reserve University: Cleveland, OH, 1999; www.cwru.edu/artsci/math/wells/pub/abouthbk.htm.
(27) www.malt.cmich.edu/sssnarrative
(28) Wood, K. M. *Scotopic Sensitivity Syndrome;* Michigan Adult Learning and Technology Center, 2000; www.malt.cmich.edu/sssnarrative.htm.
(29) http://emacspeak.sourceforge.net
(30) www.freedomscientific.com
(31) Lang, H. G.; McKee, B. G.; Conner, K. N. Characteristics of effective teachers: A descriptive study of perceptions of faculty and deaf college students. *American Annals of the Deaf,* **1993,** *138,* 252–259.
(32) Lang, H. G.; Dowaliby, F. J.; Anderson, H. Critical teaching incidents: Recollections of deaf college students. *American Annals of the Deaf,* **1994,** *139,* 119–127.
(33) Lang, H. G.; Stinson, M. S.; Basile, M.; Kavanagh, F.; Liu, Y. Learning styles of deaf college students and teaching behaviors of their instructors. *Journal of Deaf Studies and Deaf Education,* **1998,** *4,* 16–27.
(34) www.wyndtell.net
(35) Burgstahler, Sheryl. *Tips for Science Teachers Having Students with Disabilities;* ERIC Classroom Guide ED 409 161, 1997.
(36) http://tte.tamu.edu
(37) Barth, John L. The Development and Evaluation of a Tactile Graphics Kit. *Journal of Visual Impairment and Blindness,* September 1992.
(38) http://dots.physics.orst.edu
(39) http://sciencekit.com
(40) http://sciencekit.com
(41) www.rit.edu/~dabdis/tech/tsp.html
(42) Caccamise, F.; Lang, H. G. *Signs for science and mathematics: A resource book for teachers and students;* National Technical Institute for the Deaf: Rochester, NY, 1996.
(43) Smith, Sally L. *Succeeding Against the Odds: Strategies and Insights from the Learning Disabled;* Jeremy P. Tarcher, Inc., 4848 Wilshire Blvd., Los Angeles,

CA 90036; 213-935-9980.
(44) www.ldonline.org
(45) National Federation of the Blind. *Post Secondary Educational and Career Development: A Resource Guide for the Blind, Visually Impaired and Physically Handicapped;* Baltimore, MD; cassette LSA04C N/C; print LSA04P.
(46) www.collegeboard.org
(47) www.washington.edu/computing/atl/DOCS/atl2.html#hardware
(48) www.nfb.org/tech/ibtc.htm
(49) Flank, S.; Flank, L. Teaching with Computers. *CHEMTECH,* **1992,** *22,* 264.
(50) Disabilities, Opportunities, Internetworking, and Technology, www.washington.edu/doit
(51) Ladner, Richard E. Computer Accessibility for Federal Workers with Disabilities. Communications of the ACM, Aug 1989, *32,* 952–956.
(52) CambridgeSoft.com, www.camsoft.com
(53) www.cas.org/SCIFINDER/SCHOLAR
(54) www.prentrom.com
(55) www.orin.com
(56) www.prentrom.com/access/wivik.html
(57) people.a2000.nl/gnijhuis/spinal/spinal-comp.html
(58) Design Science, Inc., www.mathtype.com
(59) www.dragonsys.com
(60) www-4.ibm.com/software/speech/
(61) Scadden, L. A. An overview of technology and visual impairment. *Technology and Disability,* **1991,** *1,* 11.
(62) Duxbury Systems, www.duxburysystems.com
(63) ALVA Access Group, www.aagi.com
(64) Hooleon Corp., www.hooleon.com
(65) Telesensory Systems, www.telesensory.com
(66) humanware.com
(67) Clarity Solutions, www.clarityaf.com
(68) Ai Squared, www.aisquared.com
(69) Dolphin Access Systems, www.dolphinusa.com
(70) Apple, www.apple.com/education/k12/disability
(71) Next Generation Technologies, www.ngtvoice.com
(72) www.rit.edu/~msserd
(73) www.donjohnston.com
(74) www.madentec.com
(75) www.lhsl.com/education
(76) www.inspiration.com
(77) www.intellitools.com
(78) www.texthelp.com
(79) http://barrier-free.arch.gatech.edu/index.html
(80) Tallman, D. E. pH Titration Apparatus for the Blind Student. *Journal of Chemical Education,* **1978,** *55* (9), 605–606.

(81) www.wheelchairnet.org
(82) 56 FR 35408, 36 CFR Part 1191, ADA Standards for Accessible Design.
(83) www.access-board.gov
(84) ANSI Z35859.1-1990, Standard Requirements, 4.6.1 and 7.4.4.
(85) Blumenkopf, T. A.; et al. Mobility-Handicapped Individuals in the College Chemistry Curriculum: Students, Teachers and Researchers. *Journal of Chemical Education*, **1981,** *58* (3), 213–221.
(86) Gerig, J. T.; Nieman, R. A.; Popplewell, R. F. Changing Samples in Superconducting Magnets from a Seated Position. *Journal of Magnetic Resonance*, **1983,** *53*, 129–130.
(87) NSF, www.nsf.gov/cgi-bin/getpub?nsf9154
(88) NIH, http://grants.nih.gov/training/disabilities.htm
(89) Lifestand, www.lifestand.tm.fr/English/gammes/classlite.htm
(90) Independence Technology, www.indetech.com
(91) Levo, www.levo.ch
(92) www.kansas.net/~cbaslock/mobil.html#whe; www.kansas.net/~cbaslock/index.html
(93) www.medmarket.com/index.cfm?id=disability
(94) American Chemical Society, Committee on Chemical Safety. *Safety in Academic Chemistry Laboratories*, 6th ed.; Washington, DC, 1995 (revised 1998).
(95) Wood, John T.; Eddy, Roberta M. Olfactory Titration. *Journal of Chemical Education*, **1996,** *73* (3), 257–258.
(96) Hiemenz, Paul C.; Pfeiffer, Elizabeth. A General Chemistry Experiment for the Blind. *Journal of Chemical Education*, **1972,** *49*, 263–265.
(97) Tombaugh, Dorothy. Chemistry and the Visually Impaired. *Journal of Chemical Education*, **1981,** *58*, 222–226.
(98) Tombaugh, Dorothy. Disabilities SourceBook for High School Chemistry Teachers. In *CHEMSOURCE;* Orna, Mary Virginia, Heikkinen, Henry, and Schreck, James, Eds.; American Chemical Society, Office of High School Chemistry: Washington, DC, 1993.
(99) Cetera, M. M. Laboratory Adaptations for Visually Impaired Students: Thirty Years in Review. *Journal of College Science Teaching*, **1983,** *12*.
(100) Lunney, David; Morrison, Robert C. High Technology Laboratory Aids for Visually Handicapped Chemistry Students. *Journal of Chemical Education*, **1981**, *58*, 226–227.
(101) Anderson, James L. Chemical Instrumentation for the Visually Handicapped. *Journal of Chemical Education*, **1982,** *59*, (10), 871–872.
(102) National Research Council, Assembly of Mathematical and Physical Sciences, Committee on Hazardous Substances in the Laboratory. *Prudent Practices for Handling Hazardous Chemicals in Laboratories;* Washington, DC, 1981.
(103) Stern, V. W.; Lifton, D.; Malcom, S. M. *Resource Directory of Handicapped Scientists*, 2nd ed.; American Association for the Advancement of Science: Washington, DC, 1987.
(104) www.dupont.com

(105) Swanson, Anne Barrett; Steere, Norman V. Safety Considerations for Physically Handicapped Individuals in the Chemistry Laboratories. *Journal of Chemical Education*, **1981,** *58*, 234–238.

(106) Crosby, G. A. Attitudinal Barriers for the Physically Handicapped. *Journal of Chemical Education*, **1981,** *58* (3), 206–208.

(107) Clayton, Julie. Can They Do Science? *The New Scientist*, **1992,** *135* (1837), 31–34.

(108) Cunningham, Carmela; Noble, S. *EASI Street to science and math for K–12 students.* In papers presented at the CSUN 1998 Conference, Los Angeles, CA; ERIC document number 420 962.

(109) Keller, Edward C. Science Education for Motor/Orthopedically Impaired Students. In *A Futures Agenda: Proceedings of a Working Conference on Science for Persons with Disabilities;* Stefanich, G., Egleston-Dodd, J., Eds.; National Science Foundation,1994.

(110) National Research Council, Committee on Science Education K–12, Center for Science, Mathematics, and Engineering Education. *Every Child a Scientist: Achieving Scientific Literacy for All;* National Academy Press, 1998.

(111) Summers, Laureen. Response to Ed Keller's presentation, "Motor/ Orthopedically Impaired Students in Science." *In A Futures Agenda: Proceedings of a Working Conference on Science for Persons with Disabilities,* Stefanich, G., Egleston-Dodd, J., Eds.; National Science Foundation, 1994.

(112) Seymour, Elaine; Hunter, A. *Talking about Disability: The Education and Work Experience of Graduates and Undergraduates with Disabilities in Science, Mathematics and Engineering Majors;* University of Colorado, Bureau of Sociological Research: Boulder, CO, 1998.

(113) www.entrypoint.org

(114) Wedin, Randall E. Implementing the Americans with Disabilities Act. *Today's Chemist at Work*, American Chemical Society: Washington, DC, March 1993.

(115) Witt, Melanie Astaire. *Job Strategies for People with Disabilities: Enable Yourself for Today's Job Market;* Peterson's Guides, P.O. Box 2123, Princeton, NJ 08543-2123; 800-249-9150; 1992.

(116) Bolles, Richard Nelson. *Job-Hunting Tips for the So-Called Handicapped or People Who Have Disabilities;* Ten Speed Press, P.O. Box 7123, Berkeley, CA 94707; 1991.

(117) ACS Committee on Chemists with Disabilities, membership.acs.org/C/CWD/

(118) www.washington.edu/doit/Careers

(119) www.washington.edu/doit/Resources/college.html

(120) www.aaas.org

(121) http://rasem.nmsu.edu

(122) chemistry.org

(123) www.trace.wisc.edu/docs/pacbell_ud/agpd.htm

(124) www.bdarch.com

(125) www.design.ncsu.edu/cud/univ_design/princ_overview.htm

(126) www.webaim.org

(127) http://validator.w3.org

(128) www.cast.org/bobby

(129) www.w3.org/TR/WAI-WEBCONTENT

(130) W3C, www.w3.org

(131) www.access-board.gov/sec508/508standards.htm

(132) www.webaim.org/standards

(133) www.macromedia.com/macromedia/accessibility

(134) www.ssbtechnologies.com

(135) http://webaim.org/tutorials/tables

General references

29 U.S.C. 794, Rehabilitation Act of 1973 (Section 504) (as amended through March 22, 1988).

42 U.S.C., Americans with Disabilities Act of 1990.

Boas, Edward E. Modifying Science Instruction To Meet the Needs of the Hearing Impaired. *Journal of Research in Science Teaching,* **1978,** *15,* 257–262.

Brindle, Ian D.; et al. Laboratory Instruction for the Motor Impaired. *Journal of Chemical Education,* **1981,** *58* (3), 232–233.

Corn, A.; Koenig, A. Least restrictive access to the visual environment. *Journal of Visual Impairment and Blindness,* **1991,** *85,* 195–197.

Department of Education, Office for Civil Rights. *Recruitment, Admissions and Handicapped Students: A Guide for Compliance with Section 504 of the Rehabilitation Act of 1973;* Washington, DC.

Harris, Mary Elizabeth. *Teaching the Handicapped in the Sciences: A Selected Bibliography of Articles,* 1972–1983; ERIC Document Reproduction Services ED 231 666, Educational and Resources Information Center for Mathematics, Science, and Environmental Studies: Columbus, OH.

Henderson, David R. *Laboratory Methods in Physics for the Blind;* U.S. Educational Resources Information Center, ERIC Document ED 011 155.

Hinchcliffe, L.; Skawinski, J. Hearing Is Believing: The Modified Spectroscope. *The Science Teacher,* **1983,** *50,* 54–55.

Jarrow, J. E. *The Impact of Section 504 on Post-Secondary Education,* Subpart E; AHEAD: Columbus, OH, 1991.

Lang, H. G. *Silence of the Spheres: The Deaf Experience in the History of Science;* Bergin & Garvey Press: Westport, CT, 1994.

National Joint Committee on Learning Disabilities. *Learning Disabilities: Issues in Higher Education Report from the National Joint Committee on Learning Disabilities;* 1999 (www.ldonline.org/njcld).

National Science Board, National Science Foundation. *Science and Engineering Indicators: 1998* (NSB 98-1); Arlington, VA, 1998; www.nsf.gov/sbe/srs/seind98/start.htm.

Norman, Katherine; et al. Teaching students with disabilities in inclusive science classrooms: Survey results. *Science Education,* April 1998, 82 (2), 127–146.

Thayer, Ann M. Disabilities Law Is Being Implemented by Companies as Needs Arise. *Chemical & Engineering News,* Oct 26, 1992, 9.

Tombaugh, Dorothy. *Biology for the Blind;* Euclid Public Schools: Euclid, OH 44123; ERIC Document ED 073-677.

Tombaugh, Dorothy. Chemistry for the Visually and Orthopedically Impaired. In *Chemistry in the Two-Year College;* Bardole, Jay, Ed.; American Chemical Society: Washington, DC, 1984; pp 122–133.

Vaughn, Sharon; et al. The underlying message in LD intervention research: Findings from research synthesis. *Exceptional Children,* Fall 2000, 67 (1), 99–114.

Willoughby, Doris. *Handbook for Itinerant and Resource Teachers of Blind and Visually Impaired* Students; National Federation of the Blind: Baltimore, MD, 1989.

Credits

Our gratitude and appreciation go to Ron Nieman and Karl Booksh, both of Arizona State University, for securing the NSF funding and organizing the workshop, held November 2000, that resulted in the first draft of this 4th edition of *Teaching Chemistry to Students with Disabilities.*

Workshop participants

Karl Booksh, Ph.D., assistant professor, Department of Chemistry, Arizona State University

Marguerite Ciolkosz, Ph.D., chemistry teacher, State College Area High School, State College, PA

Lyla Mae Crawford, M.S., coordinator, DO-IT, University of Washington

Thomas Doyle, Ph.D., research chemist, retired (35 years), U.S. Food & Drug Administration

Bonnie Blake-Drucker, A.I.A., Blake-Drucker Architects

Carole S. Dunning, Psy.D., coordinator for students with learning disabilities, ADHD, and psychiatric disorders, Adaptive Programs, Purdue University

R. Michael Everly, Ph.D., instrumentation scientist, Jonathan Amy Facility for Chemical Instrumentation, Department of Chemistry, Purdue University

Paul Gilletti, Ph.D., chemistry faculty, Mesa Community College

Harry G. Lang, Ed.D., professor, Department of Research, National Technical Institute for the Deaf, Rochester Institute of Technology

Gina MacDonald, Ph.D., assistant professor of chemistry, James Madison University

Tammy Milillo, student, Department of Chemistry, SUNY Buffalo

Dorothy LaFave Miner, M.T., associate specialist, Department of Biological and Agricultural Engineering, North Carolina State University

Michael L. Moore, Ph.D., professor of chemistry, Gallaudet University

Ronald A. Nieman, Ph.D., senior research professional, Department of Chemistry and Biochemistry, Arizona State University

Alan Roth, M.A., Visual Impairments, science teacher, Indiana School for the Blind

Greg P. Stefanich, Ed.D., professor, Science Education, University of Northern Iowa

Virginia W. Stern, M.A., director, Project on Science, Technology and Disability and ENTRY POINT! American Association for the Advancement of Science, Washington, DC

Cary Supalo, graduate student, B.S. chemistry/B.A. communications, Pennsylvania State University

Anne B. Swanson, Ph.D., science dean emeritus, Sonoma State University (California State University)

Deborah E. Taska, M.S., assistant director, Disability Resources for Students, Arizona State University

Cynthia Tolman, Ph.D., associate professor, Department of Natural Sciences, Landmark College

H. David Wohlers, Ph.D., chair, Department of Chemistry, Truman State University

Frank Walworth, American Chemical Society staff

Patricia Vrabel, American Chemical Society staff

Members of the American Chemical Society Board Committee on Chemists with Disabilities

Dorothy LaFave Miner, M.T., associate specialist, Department of Biological and Agricultural Engineering, North Carolina State University

Todd A. Blumenkopf, Ph.D., principal analyst, Pfizer Global Research & Development, Pfizer, Inc.

Karl Booksh, Ph.D., assistant professor, Department of Chemistry, Arizona State University

Thomas Doyle, Ph.D., research chemist, retired (35 years), U.S. Food & Drug Administration

R. Michael Everly, Ph.D., instrumentation scientist, Jonathan Amy Facility for Chemical Instrumentation, Department of Chemistry, Purdue University

Christine Sullivan, Ph.D., freelance editor

Judy Summers-Gates, B.S., analytical chemist, U.S. Food & Drug Administration, Philadelphia Pharmaceutical Laboratory

Anne B. Swanson, Ph.D., science dean emeritus, Sonoma State University (California State University)

Edel Wasserman, Ph.D., DuPont Co., Wilmington, DE

H. David Wohlers, Ph.D., chair, Department of Chemistry, Truman State University

Virginia W. Stern, M.A., director, Project on Science, Technology and Disability and ENTRY POINT! American Association for the Advancement of Science, Washington, DC

Kathleen Thompson, ACS staff liaison, publication coordinator

Disclaimer

The information and resources contained in *Teaching Chemistry to Students with Disabilities* have been compiled from what are believed to be reliable sources and are intended to promote and support the full and reasonable participation of those with disabilities as they pursue education particularly in the chemical sciences. The American Chemical Society (ACS) does not, however, purport in these materials and resources to specify the minimum safety or legal standards or to address all of the compliance requirements or safety procedures associated with providing accommodations related to people with disabilities. This information is intended to serve only as a starting point for accepted practices and should not be construed as containing all the necessary compliance, safety, or warning information, nor should it be construed as representing the policy of ACS.

No warranty, guarantee, or representation is made by ACS as to the accuracy or completeness of the information contained in these materials and resources, and ACS assumes no liability or responsibility in connection therewith. The users of the materials and resources are responsible for complying with all pertinent local, state, and federal laws, regulations, and standards, and they should consult with legal counsel or other professional advisers about applicable laws, safety issues, and compliance issues.

American Chemical Society
Committee on Chemists with Disabilities
1155 16th St. NW
Washington, DC 20036
cwd@acs.org

2195-01-10K

BEST COPY AVAILABLE

SE067842

U.S. Department of Education
Office of Educational Research and Improvement (OERI)
National Library of Education (NLE)
Educational Resources Information Center (ERIC)

REPRODUCTION RELEASE

(Specific Document)

I. DOCUMENT IDENTIFICATION:

Title: Teaching Chemistry to Students with Disabilities, 4th Edition	
Author(s): Edited by DL Miner, R. Nieman, AB Swanson and M. Woods.	
Corporate Source: American Chemical Society	Publication Date: 2001

II. REPRODUCTION RELEASE:

In order to disseminate as widely as possible timely and significant materials of interest to the educational community, documents announced in the monthly abstract journal of the ERIC system, *Resources in Education* (RIE), are usually made available to users in microfiche, reproduced paper copy, and electronic media, and sold through the ERIC Document Reproduction Service (EDRS). Credit is given to the source of each document, and, if reproduction release is granted, one of the following notices is affixed to the document.

If permission is granted to reproduce and disseminate the identified document, please CHECK ONE of the following three options and sign at the bottom of the page.

The sample sticker shown below will be affixed to all Level 1 documents	The sample sticker shown below will be affixed to all Level 2A documents	The sample sticker shown below will be affixed to all Level 2B documents
PERMISSION TO REPRODUCE AND DISSEMINATE THIS MATERIAL HAS BEEN GRANTED BY Sample TO THE EDUCATIONAL RESOURCES INFORMATION CENTER (ERIC) 1	PERMISSION TO REPRODUCE AND DISSEMINATE THIS MATERIAL IN MICROFICHE, AND IN ELECTRONIC MEDIA FOR ERIC COLLECTION SUBSCRIBERS ONLY, HAS BEEN GRANTED BY Sample TO THE EDUCATIONAL RESOURCES INFORMATION CENTER (ERIC) 2A	PERMISSION TO REPRODUCE AND DISSEMINATE THIS MATERIAL IN MICROFICHE ONLY HAS BEEN GRANTED BY Sample TO THE EDUCATIONAL RESOURCES INFORMATION CENTER (ERIC) 2B
Level 1	Level 2A	Level 2B
X Check here for Level 1 release, permitting reproduction and dissemination in microfiche or other ERIC archival media (e.g., electronic) and paper copy.	Check here for Level 2A release, permitting reproduction and dissemination in microfiche and in electronic media for ERIC archival collection subscribers only	Check here for Level 2B release, permitting reproduction and dissemination in microfiche only

Documents will be processed as indicated provided reproduction quality permits.
If permission to reproduce is granted, but no box is checked, documents will be processed at Level 1.

I hereby grant to the Educational Resources Information Center (ERIC) nonexclusive permission to reproduce and disseminate this document as indicated above. Reproduction from the ERIC microfiche or electronic media by persons other than ERIC employees and its system contractors requires permission from the copyright holder. Exception is made for non-profit reproduction by libraries and other service agencies to satisfy information needs of educators in response to discrete inquiries.

Signature: Tamara Nameroff	Printed Name/Position/Title: Tamara Nameroff Assistant Director	
Organization/Address: American Chemical Society 1155 - 16th St, NW Washington, DC 20036	Telephone: 202 872 4523	FAX: 202 872 8068
	E-Mail Address: t_nameroff@acs.org	Date: 5/5/03

III. DOCUMENT AVAILABILITY INFORMATION (FROM NON-ERIC SOURCE):

If permission to reproduce is not granted to ERIC, or, if you wish ERIC to cite the availability of the document from another source, please provide the following information regarding the availability of the document. (ERIC will not announce a document unless it is publicly available, and a dependable source can be specified. Contributors should also be aware that ERIC selection criteria are significantly more stringent for documents that cannot be made available through EDRS.)

Publisher/Distributor:	American Chemical Society
Address:	Office of Society Services 1155 16th Street NW Washington, DC 20036 Available online at membership.acs.org/C/CWD/TeachChem4.pdf
Price:	

IV. REFERRAL OF ERIC TO COPYRIGHT/REPRODUCTION RIGHTS HOLDER:

If the right to grant this reproduction release is held by someone other than the addressee, please provide the appropriate name and address:

Name:	
Address:	

V. WHERE TO SEND THIS FORM:

Send this form to the following ERIC Clearinghouse:

However, if solicited by the ERIC Facility, or if making an unsolicited contribution to ERIC, return this form (and the document being contributed) to:

ERIC Processing and Reference Facility
4483-A Forbes Boulevard
Lanham, Maryland 20706

Telephone: 301-552-4200
Toll Free: 800-799-3742
FAX: 301-552-4700
e-mail: ericfac@inet.ed.gov
WWW: http://ericfacility.org

EFF-088 (Rev. 2/2001)