DOCUMENT RESUME

ED 451 691 EF 005 895

TITLE	Facility Guidelines for Learning Technologies.
INSTITUTION	Tasmanian Dept. of Education and the Arts, Hobart (Australia).
PUB DATE	1997-00-00
NOTE	74p.
AVAILABLE FROM	For full text: http://www.doe.tased.edu.au/facnet/guidelines/learningtech/direfac.html.
PUB TYPE	Guides - Non-Classroom (055)
EDRS PRICE	MF01/PC03 Plus Postage.
DESCRIPTORS	*Educational Facilities Improvement; *Educational Technology; Elementary Secondary Education; Foreign Countries; *Guidelines; Public Policy
IDENTIFIERS	*Australia (Tasmania); *Technology Implementation

ABSTRACT

This document provides detailed guidelines for implementing the Tasmanian government's policy on computers in schools and identifies the building planning issues to help schools develop realistic budget estimates when creating their Learning Technologies Plan. The document's scope covers computer placement and building modifications; furniture requirements and dimensional suggestions; lighting and glare control; security; electric power supply including noise, radiation, and interference control; telephone system expansion; and cost estimation. Included are case studies highlighting specific problems encountered by six schools in setting up their model classrooms. (GR)

Reproductions supplied by EDRS are the best that can be made
from the original document.

Facility Services Section
Department of Education

Facility Guidelines for Learning Technologies

This document provides detailed guidelines for the installation of services for implementing the Government's policy in relation to computers in schools.

The Facility Services Section welcomes comments or suggestions from Tasmanian schools about the document.

Table of Contents

1. INTRODUCTION
   1.1 Objectives
   1.2 Background
   1.3 Scope
   1.4 Summary of Recommendations
2. LEARNING TECHNOLOGIES PLANNING TEAM
   2.1 Learning Technologies Plan
   2.2 LTP Execution Planning Team
3. ARRANGING COMPUTERS IN THE CLASSROOM
   3.1 Introduction
   3.2 General Issues
   3.3 Initial Placement Planning
   3.4 Locating Network Outlets
   3.5 Locating File Servers
4. DESIRABLE CLASSROOM ARCHITECTURE
   4.1 Space Issues
   4.2 Floor Coverings
   4.3 Noise and Acoustics
   4.4 Environmental Issues
5. FURNITURE FOR COMPUTER REQUIREMENTS
   5.1 General Design
   5.2 Ergonomic Issues
   5.3 Constructing New Benches
   5.4 Storage
   5.5 Furniture Costs
6. ELECTRICAL ISSUES
   6.1 Power Wiring and Computer Requirements
   6.2 Issues Arising
   6.3 Providing Additional Power Outlets
   6.4 Flexible Furniture Placement
   6.5 Electromagnetic Radiation Problems
7. LIGHTING
   7.1 Introduction
   7.2 Issues
   7.3 Suggested Approach
   7.4 Products, Prices and Availability
8. SECURITY GENERALLY

ED 451 691

U.S. DEPARTMENT OF EDUCATION
Office of Educational Research and Improvement
EDUCATIONAL RESOURCES INFORMATION CENTER (ERIC)
☑ This document has been reproduced as received from the person or organization originating it.
☐ Minor changes have been made to improve reproduction quality.
• Points of view or opinions stated in this document do not necessarily represent official OERI position or policy.

PERMISSION TO REPRODUCE AND DISSEMINATE THIS MATERIAL HAS BEEN GRANTED BY
L. Dunn
TO THE EDUCATIONAL RESOURCES INFORMATION CENTER (ERIC)
1

EF 005 895

BEST COPY AVAILABLE

8.1 Introduction
8.2 Intruder Prevention
8.3 Intruder Detection
8.4 Computer Theft Protection
9. TELEPHONE SYSTEM
9.1 Issues
9.2 Phone System Expansion
10. PURCHASING CONSIDERATIONS
10.1 Equipment and Furniture Purchases
10.2 Building Works Execution Considerations
11. RESOURCE SCHOOLS CASE STUDIES
11.1 Introduction
11.2 Primary School "A"
11.3 Primary School "B"
11.4 Primary School "C"
11.5 Primary School "D"
11.6 Primary School "E"
11.7 Primary School "F"
12. ACKNOWLEDGEMENTS
12.1 Bibliography
12.2 Consultant
12.3 Assistance

Here is a useful link to further assist school principals prepare for the introduction of learning technologies into schools: Victorian Government: "Learning Technologies Planning Guide".

© Copyright Department of Education, Tasmania 1997.

Reproduction in whole or in part by electronic, mechanical or chemical means including photocopying, recording or by any information storage and retrieval system, in any language, is strictly prohibited, except as provided for by the *Copyright Act 1968*.

The information contained in this document is believed to be reliable. However no warranty is given or implied and no responsibility is accepted for any errors contained herein or any damage or loss, howsoever caused, suffered by any individual or corporation as a result of reliance upon the document.

Neither the document nor its contents may be referred to or quoted in any statement, study, report, application, prospectus, loan, other agreement or document, without the express written approval of the Department of Education, Tasmania.

A number of service providers are mentioned in the text. Their inclusion is to assist schools in sourcing these services. It should not be construed that these are sole or preferred suppliers, or that they are endorsed by the Department in any way. The pricing of any items is indicative, and should be confirmed with the supplier before ordering.

TOP

Enquiries: timothy.gourlay@education.tas.gov.au

[Home] [Up] [Child Care Facilities in Schools] [Learning Technologies: Facility Issues]
[Maintenance & Minor Works: Expenditure Classification] [Shared Use of Community & Educational Facilities] [Skill Centres in Schools]
[Strategic Asset Management Plan] [Visual Space and Asset Management System]

education home

TASMANIA online

[Feedback] [Help] [Search] [Sitemap]

This page has been produced by the Facility Services Section.
Its content has been authorised by Tim Gourlay, Manager (Facility Services).
Questions concerning its content may be directed by email to timothy.gourlay@education.tas.gov.au
This page was last modified on 07 March 2001.
The URL for this page is http://www.doe.tased.edu.au/facnet/guidelines/learningtech/direfac.htm
You are directed to a disclaimer and copyright notice governing the information provided.

Facility Services Section
Department of Education

Facility Guidelines for Learning Technologies

1. INTRODUCTION

1.1 Objectives

This publication was initiated by Facility Services Section after a search showed that little relevant published material was available which addressed issues being confronted in the earliest implementation of the Government's policy, which will see widespread deployment of computers and information technology in classrooms and throughout schools. Andrew Boon Pty Ltd of North Hobart, Tasmania, were commissioned to work in conjunction with Department of Education staff to develop th' documentation. It was developed from experience gained in undertaking work in lighthouse schools, from existing Department of Education guidelines and the resources of the company. (See acknowledgements in part 12.)

The broad focus of the Government's policy is the use of computers as a routine tool in teaching and learning in classroom situations, as opposed to the traditional study of computing as a subject or skill in its own right in a laboratory environment. This guide sets out the building considerations associated with a general deployment of computers throughout a school based on computers in classrooms. It does not address the planning of computer laboratories with, say, 20 to 35 computers in one room.

These guidelines are a resource for schools working towards the execution of a Learning Technologies Plan, and provide planning, design and budgetary advice on building issues.

1.2 Background

The Tasmanian Government has provided IT grants to all schools for the provision of computer hardware, network cabling, active network equipment, software and IT support. This forms part of a program for IT for schools which also includes connections to the Internet, provision of IT infrastructure support, provision of Professional development for teachers and the development of Web resources

In most instances, these computers will be installed in schools and classrooms that were built some time ago, often long before educational technology was an important issue in facility planning.

The Government's policy proposes that individual schools will fund the provision of benches, desks, any other furniture and furnishing requirements, security systems, telephone systems, electrical modifications and any other building requirements that may

be necessary to accommodate the computers provided under the policy.

It is presumed that funds released from schools' existing computer purchase budgets will be available for such works. Should this not be so, schools should initiate works through the District Minor Works Program.

1.3 Scope

This document aims to identify the building planning issues resulting from the Government's policy, suggests treatment, and costs alternative solutions, to help schools develop realistic budget estimates and develop their Learning Technologies Plan execution.

The scope of this document includes:

- Computer placement and building modifications
- Furniture requirements and dimensional suggestions
- Lighting and glare control
- Security
- Electric power supply including noise, radiation and interference control
- Telephone system expansion
- Cost estimation

1.4 Summary of Recommendations

1.4.1 Introduction

This document should be treated as a resource for determining treatment of each building and furnishing related issue which might arise from the widespread deployment of computers.

At any particular school, only a proportion of the issues covered will be of significance. It is suggested that interested school staff scan through the broad content briefly, then focus on those issues which are known to be of concern.

1.4.2 Key Points

a. The infrastructure requirements depend on the placement of learning technologies, which in turn arise from a Learning Technologies Plan (LTP). During LTP execution planning, input from people with a knowledge of buildings, services, and furniture, will be necessary.

b. Views on computer placement in classrooms will change over time with experience, class sizes and staff changes. Infrastructure such as power points, network outlets, and furniture, should accommodate the widest possible range of classroom layouts.

c. Computers should be allowed at least 1,200mm of desk width each, and up to 1,400mm where two students will share one computer. The front of fixed benches against walls should be at least 850mm from the wall behind.

d. Most computers will require wired network and power connections. It is not economically feasible to provide laptops with the power and range of software, or

wireless networks with the data throughput, to accommodate the typical spectrum of multimedia learning technologies applications. (Student battery powered palm top computers may find application for routine text and number processing, but these are outside the scope of the Government's policy).

e. Network outlets should generally be arranged in pairs for cost effectiveness, with the wall plate located half way between adjacent computer locations.

f. File servers should be located in a secure room where possible.

g. Existing classroom dimensions will often be inadequate to accommodate computers. Removal of surplus fittings and relocation or removal of walls may be necessary.

h. Computers tend to be noisy in use, and room finishes with sound absorbent characteristics are desirable.

i. Avoid placing computers in dusty locations, and treat outside sources of dust where possible.

j. Ergonomics are important. Variations of student height in any given class group make the use of height adjustable chairs desirable, especially in resource areas like libraries used by students with a wide range of ages. Desks should be purchased or modified to proposed Australian standard heights.

k. Custom built furniture must be strong enough to support the weight of adults standing on it without more than a few millimetres deflection or damage.

l. A minimum of one double power point per network outlet is recommended. Existing single power points may require replacement with two or four gang outlets. A budgetary allowance of $15 per full time student is recommended for electrical work.

m. "Soft wiring" products should be used to provide power points and data connections through or within furniture.

n. Electromagnetic compatibility problems may arise where computer monitors are placed close to major sub-mains or substations.

o. Strong sunlight or glare from lights can reduce screen visibility or contrast. Placement of computers in parts of rooms not normally reached by direct sunlight may simplify lighting treatment. Curtains, blinds and special light fittings can be used to control lighting further if problems are experienced.

p. New computers are known to be a target for burglars, making intruder detection and prevention throughout the school most important. Servers containing important data should be particularly well protected by placement in a suitably secure room.

q. Inexperienced computer users will often require help to resolve a software or hardware problem. To avoid the need to leave classrooms to get help and to facilitate direct communication with help desks, telephone extension handsets should be provided in classrooms. Parallel phones with the same extension number can reduce the cost of PABX equipment.

r. Building and furniture requirements to accommodate computers supplied under the Government's policy will need to be prioritised. The total budget required to provide ideal computer furniture, space and services within classrooms would range from $1,000 to $8,000, and would average $3,000.

Table of Contents

Enquiries: Les.Burbury@central.tased.edu.au

[Home] [Contents] [1. Introduction] [2. Learning Technologies Planning Team] [3. Arranging Computers in Classrooms] [4. Desirable Classroom Architecture] [5. Furniture for Computer Requirements] [6. Electrical Issues] [7. Lighting] [8. Security Generally] [9. Telephone System] [10. Purchasing Considerations] [11. Resource Schools: Case Studies] [12. Acknowledgements]

education home

This page has been produced by the Facility Services Section.
Its content has been authorised by Richard Davoren, Manager (Facility Services).
Questions concerning its content may be directed by email to Richard.Davoren@central.tased.edu.au
This page was last modified on 25 October 2000.
The URL for this page is http://www.doe.tased.edu.au/facnet/guidelines/learningtech/direcfs1.htm
You are directed to a disclaimer and copyright notice governing the information provided.

Facility Services Section
Department of Education

Facility Guidelines for Learning Technologies

2. LEARNING TECHNOLOGIES PLANNING TEAM

2.1 Learning Technologies Plan

Generally schools will have embarked on the creation of a Learning Technologies Plan (LTP) which sets out how it is proposed to use technology to enhance learning outcomes. A more developed plan may include more specific objectives like target learning outcomes or competency standards, deployment timetables and resource requirements.

Up to this point, the planning will be primarily by teachers and administrators.

The extent and timing of building and infrastructure requirements will be determined by how and where the learning technologies are deployed according to the LTP.

2.2 LTP Execution Planning Team

Once the basic plan is in place, the LTP must be fleshed out into a stage by stage execution plan which will require the involvement of a wider range of people to identify and address the issues arising.

At various times the planning team for this phase might include:

- Teachers and library staff
- Administrators and budgeting/financial staff
- IT Consultant (specialists in software or hardware)
- Building construction specialists (architects, draftspeople)
- Communications network planning specialists (probably resourced by central office contracts)
- People with a knowledge of school's electrical and mechanical systems
- Students
- Parents and Friends

This team will address the issues raised in this guide. The composition of the team will vary from issue to issue.

Table of Contents

[Home] [Contents] [1. Introduction] [2. Learning Technologies Planning Team] [3. Arranging Computers in Classrooms]
[4. Desirable Classroom Architecture] [5. Furniture for Computer Requirements] [6. Electrical Issues] [7. Lighting]
[8. Security Generally] [9. Telephone System] [10. Purchasing Considerations] [11. Resource Schools: Case Studies]
[12. Acknowledgements]

education home

This page has been produced by the Facility Services Section.
Its content has been authorised by Richard Davoren, Manager (Facility Services).
Questions concerning its content may be directed by email to Richard.Davoren@central.tased.edu.au
This page was last modified on 27 October 2000.
The URL for this page is http://www.doe.tased.edu.au/facnet/guidelines/learningtech/direcfs2.htm
You are directed to a disclaimer and copyright notice governing the information provided.

Facility Services Section
Department of Education

Facility Guidelines for Learning Technologies

3. ARRANGING COMPUTERS IN THE CLASSROOM

3.1 Introduction

The deployment of computers in the classroom should enhance the students' feeling of well-being and facilitate learning.

The placement of computers in classrooms will reflect:

- teaching style and curriculum integration considerations
- physical restrictions imposed by the classroom
- supervision requirements

There is no single correct way to place computers or other information technology equipment in the classroom. Views on placement will change with time, experience, class sizes and staff changes.

As far as possible, fixed infrastructure and furniture should thus cater for the widest range of possibilities, rather than the perceived immediate needs.

3.2 General Issues

Classrooms are often too small to accommodate ideal placement of computers in addition to normal teaching activities.

At Primary Level, the ability of the teacher to be able to overview what students have on their screens from the corner of his/her eye whilst still supervising other students is often cited as essential, to ensure students are working on the tasks and at the level assigned, rather than being side-tracked to unproductive activities. With experience, other arrangements encouraging different learning styles may be found more successful.

Often collaboration may be required between two or three students sharing a single computer. Spacing should thus allow for the required number of students to gather around a computer without being uncomfortably cramped. Typically 1400mm spacing between keyboards is required.

It may be desirable to encourage quiet individual computer work away from the distractions of other students using computers by widely spacing the computers in different corners of the room.

BEST COPY AVAILABLE

High speed networking is generally only practical with wired connections, and multimedia applications requiring computers with large screens and loudspeakers generally make the need for mains power connections unavoidable. Computer placement will remain constrained to locations practical (and economical) for wiring.

Both chalk dust and water are not compatible with computers, so computers should not be located close to chalk boards, and near or within wet areas.

Walkways must not be obstructed by computer placement.

3.3 Initial Placement Planning

3.3.1 General

General recommendations include:

- For practicality of power and network cabling, place computers near the perimeter of the room. Clusters of computers may be catered for by providing concentrations of network and power points at selected locations and providing an arrangement of desks with at least one desk against the wall.
- Allow a nominal spacing of 1200mm between adjacent computers where space permits to cater for both right and left handed mouse use, or 1000 mm as an absolute minimum.
- Keep computers away from walkways, doorways, wet areas and blackboards.
- Determine whether walls or redundant room fittings should be moved or discarded to create more space.
- If wide corridors are available and space is tight in the classroom, consider creating window walls or half height walls and placing computers along corridor wall.

See diagram

3.4 Locating Network Outlets

3.4.1 Introduction

The provision of network outlets will be centrally funded, but planning of space, furniture and power for associated IT equipment will only be possible after network outlet locations have been identified.

Network outlets will provide a range of functions, including connection of:

- Computers and printers to school local area network.
- Telephones to the school telephone system (PABX, keyphone or Tasinet).
- Video conferencing equipment to ISDN services.
- Fax machines including PC based faxing, and dial modems for dial up internet connections (if the school does not have a permanent connection to the Information Management Branch or the (proposed) State Government Network.
- Audio and video distribution (including broadcast television with some limitations).

The placement of outlets thus needs to address a broader range of issues than merely

connecting one computer for every five students.

Issues to consider include:

- Telephones are likely to be required to call for network administrator or help-line assistance when things go wrong (eg PC or specific application program stalls), or when setting up video conferences or point to point data transfers.
- Video conferencing will be used to provide richer subject choice through distance learning initiatives, and will eventually extend well beyond initial trials with LOTE.
- Points are required for network printer and teacher notebook connection.

3.4.2 Typical Locations

In a classroom, some network points should be available at or near every wall, to cater for:

- Student computers
- Printer
- Teacher notebook
- Telephone for support and help desk access
- Video conferencing/demonstration connection at front of class
- Extra points for flexibility of arrangement of the above

Special considerations requiring more room specific planning may apply to non-conventional class areas, including:

- Science labs
- Art and Graphic Design
- Music rooms
- MDT areas

As a general rule, any teaching space should offer at least two double network points.

Generally a minimum of a double outlet would be suggested at any particular location, although teacher staff rooms and offices if already well served with telephones may get by with single outlets at each staff desk. (If space permits a number of desk arrangements or future extra staff and desks, provide a single outlet at every possible desk location).

Placement of information technology equipment of some sort should also be considered at following locations (reasons in brackets):

- All staff areas, including staff common rooms (notebook connection)
- Recesses or corners of corridors (network printers which may be shared between several classes or staff groups)
- Office areas (administrative systems)
- Photocopier room (use of combination printer/photocopier)
- Library storage areas (CD ROM stacks controlled by Librarian)
- Library (book issue terminals, catalogue access, electronic resource access)
- Seminar and board rooms (computer training sessions, video conferences)
- General Purpose Hall, theatrettes and demonstration rooms (community and school video- and tele-conferences, internet based demonstrations, sport and health studies)
- Gymnasium and Hall (public displays, assemblies, PE and health software)

- Canteen or tuck shop (nutrition programs, automated ordering systems, electronic cash reconciliation)
- Student common room (access to network from student notebooks)
- Kitchens (health studies, diet/meal planning, recipes)
- Sewing/textiles (pattern design & interfacing to electronically controlled machines)
- Art and photographics (electronic image manipulation)
- Music (composition and interfacing to electronic musical instruments)
- Clean -dust and water free- workshop areas (electronic designs, manuals access)

3.4.3 Constraints

The placement of COMPUTERS is less constrained than the fixed wiring, because standard fly leads and power cords allow a computer location within a 2m radius of any outlet. With 5m fly leads and extension power cords, a radius of up to 4m can be achieved.

- Constraints in placement of OUTLETS, apart from physical room constraints like walkways, wet areas, and windows, are generally related to the inability to bring data cables and power cables into some locations.
- Glass walls, or walls with top half glass can prevent ready cabling on those walls unless cables can be installed from under the floor (suspended slab concrete or timber floor required), or installed from the side of the glass section using surface ducting.
- Floor heating (if present) prevents holes being drilled through floor to install cables from below.
- Power is required, so there is no point choosing outlet locations with no prospect of providing power except for telephone services.
- Solid walls may require cabling to be run on the surface of walls.
- Double outlets at a central location between two computer positions save on hole drilling, conduit, plates and wiring effort, and are more cost effective than two single outlets.

3.4.4 Suggested Outlet Placement

After the room arrangement, lighting and cabling constraints are accounted for, it is usually found that a sensible number of outlets results if allowance is made for computers at every location where a computer might be readily placed for any conceivable room furniture and teaching space rearrangement.

Generally allow for at least a double socket (connect up to two devices) at any single location.

Where a row of computers along a clean wall is envisaged, space double outlets at 2000 to 2600mm spacings. Double outlets are cheaper to wire than singles, and a double should serve one device either side.

Bear in mind that long fly leads and if necessary extension power cords can be used to place computers within a two to three metre radius of any wall outlet.

Where computers are to be placed along a row of desks coming out from the wall at right angles, provide a group of sockets on the wall and use "soft wiring" methods to connect PCs away from the wall to power and networkpoints.

Classroom Layouts:
Standard classroom (Unmodified)
Standard classroom (Modified - Sink Removed)
Standard classroom (Modified - No Sink)
Standard classroom 30 students (Modified - Sink Removed)

3.4.5 Network Outlet Height Above Floor

Issues favouring placement below desk tops, typically 500mm to socket centre above floor level, include:

- Outlets located above desk tops may tempt students to play with them if bored, causing network disconnections and possibly wearing out the connector.
- Cabling for power cords and network connections can be hidden under the desktop, leaving a more visually appealing installation.
- Where network cables must rise from below floor, noggins are less likely to be encountered.

Issues favouring placement above desk tops typically 850mm to socket centre above floor level, include:

- Holes do not need to be drilled through benches to permit cables to pass through to outlets below
- Computers, printers and accessories are easily unplugged and moved around without crawling under benches or desks
- There is no possibility of power accidentally being disconnected during equipment operation through feet getting caught on plugs or draping cables
- Equipment is easily switched off at the power point at the end of the day (if this is an issue)
- Where the cabling contractor must drop network cables from ceiling space and through walls to outlets, obstructing noggins are somewhat less likely to be encountered

A judgement must be made on the relative weight of each of the above factors, given personal preference, student attitudes, supervision levels and practicalities of available spaces, and only staff with a keen interest in educational computing will probably have the experience and interest to make specific decisions.

As a default it is thus recommended that all outlets be positioned at the same height as existing power outlets, with special consideration being given only to computer laboratories and resource rooms.

Some general recommendations are possible:

- Outlets for itinerant use like notebook connections and video conferencing must be either above desktop unless located on wall space unencumbered by furniture (eg at whiteboard end of a class room).
- Outlets in science laboratories should be above desktops, and may need to be higher to achieve regulation clearance from potentially wet areas.
- Outlets for computers permanently installed on fixed furniture with little likelihood

of change are best placed below benchtops, with cables prevented from draping using adhesive hook fasteners, clips, and/or velcro tapes.

3.4.6 Floor and Ceiling Mounted Outlets

Computer furniture in the centre of a room with no physical connection to a wall is typically found in Library issue desks and catalogue access terminals, and sometimes in computer laboratories, general purpose hall stages, and administrative open plan offices.

Normally such outlets are set flush into a raised wooden floor or computer access floor. Floor mounted outlets are not practical on ground floors with slab on ground construction unless installed during building construction.

If cabling cannot be through the floor, then ceiling outlets or "space poles" coming down from the ceiling must be provided, or under carpet cable used.

The placement of computer furniture in the centre of instructional areas is not recommended except in special circumstances because:

- Floor mounted outlets interrupt floor finishes and create points of wear if furniture is subsequently moved. Raised floor outlets can obstruct future room layout rearrangements.
- Under-carpet network cable with the required category 5 rating is relatively hard to source and expensive in Australia, and cutting into underlay may be required.
- Space poles can get in the way of furniture moves or visual eye-lines.
- Ceiling outlets with cords hanging down look untidy and equipment is difficult to connect and disconnect from sockets.

3.5 Locating File Servers

3.5.1 Introduction

In campus network environments, file servers are computers with extra memory capacity used to store all data files created by students and staff, and often master copies of application files. Special "proxy" servers may also control and streamline internet connections.

By contrast, the computers used to process information by users around the school are termed "clients".

The rationale for this so-called "client-server" arrangement is that the network manager always knows where all information is kept and can easily control access to it through network operating system security measures which are usually only accessible by using the keyboard connected to the actual server computer itself.

With all data being stored on the servers, only servers need to have their data "backed up" each day, and usually only servers have backup power to keep working if mains power fails. Backups generally require the physical intervention of the network administrator to change and store tapes.

Whilst servers simplify information management and security throughout the campus,

they're status as the repository of all information also makes them important to secure and protect.

3.5.2 Locating a Server Room

The loss of a server or unauthorised access of its information content would be much more catastrophic than the theft of a classroom computer, so choosing a secure location is an important consideration.

It may be desirable for the server to be co-located with the campus central data networking equipment, and near to the office of the campus network administrator.

A server room would not usually be occupied on a full time basis, but the servers will usually run 24 hours per day all year, and often dial up modem and internet access will be available to them from outside the school after hours.

Where the room also contains the campus communications hub, it is preferable that a location away from electrical distribution boards or any sub-station is chosen, as the electric fields and cabling in the vicinity can cause difficulty in routing network cables into the room, and substations and sub-mains cause magnetic fields which can affect computer monitors.

3.5.3 Server Room Layout

A secure and conveniently located room with space for the following is required:

- Desk space for typically three computers, keyboards, mice and monitors, for student/general, SACS and Internet Proxy servers (desk space can be conserved if necessary by using a keyboard and monitor switch to share one "user interface" between three computers).
- Bookshelves to store software and hardware instruction manuals (2m² of shelf space).
- Storage for blank and recycled backup media and disks.
- If room also contains network communications hub, space for one or two racks of communications equipment (up to 1200mm x 600mm of floor footprint against one wall).
- Storage for hardware emergency spares (spare monitors, drives).
- Storage for special tools and diagnostic equipment.
- Storage for original copies of software (installation disks).

The server room may be a dedicated room (especially in new buildings), or partly occupy an existing secure store room which already contains suitable shelving.

Server room layout, up to 300 students
Server room layout, 300-700 students

3.5.4 Desirable Server Room Features

Ideally, the room should contain the following structural features and services:

- No external walls (use an interior room if practical)

- If external wall unavoidable, no external doors
- Not subject to significant solar heating on hot summer days
- No windows, or security bars over any small windows or skylights
- Preferably blockwork walls (plaster board stud walls can be punched through)
- Thermostatically controlled ventilation with dust filtering
- Deadlock with locked/unlocked status contact reporting to the security system and key on master key system
- Strong door resistant to attack
- Security system movement detector and/or door switch
- Smoke detector connected to fire detection system (or security system if no fire detection installed throughout school)
- At least six double power outlets on their own circuit
- Uninterrupted power supply unit
- Telephone
- Lighting suitable for normal workstation standards

Computers and equipment should not be located directly under skylights in case breakage or seal failure causes rain to drip into the room.

The above features should serve as a brief for planners of server rooms being constructed in new schools or redeveloped schools.

Schools choosing a server room from a list of existing spaces should use the above to decide on which room is most ideal and adaptable with minimal modification. As modifications will be school funded, an evolutionary upgrade of features and services appropriate to the amount and value of equipment and information in the room at a given time is recommended.

3.5.5 Server Room Setup Products and Costs

Item	Description	Source	Estimated Cost $
Locks	Supply and install master-keyed lock to create a secure room - Lockwood Type 3572Z-L/R with 1070/107B satin chrome furniture	Jacksons	250.00
Custom Shelving	Installation of a bank of adjustable shelving out of 18mm Laminex "Decorwood" (1 sheet of 2400mm x 1800mm board to provide 8 shelves each 1800mm long x 300mm deep), with pre-glued matching colour iron-on edge stripping, mounted on "Kingfisher" or similar strip and bracket shelving system, fixed to timber stud wall. Including installation labour.	Laminex Industries	605.00
		Brewsters	675.00

	As above, fixed to masonry wall		
Standard Shelving	Standard bookshelf units are available from SPS Contract suppliers. These are made out of grey or beige melamine and have adjustable shelving.		
	900W x 300D x 1200H - 3 adjustable shelves	Tas Executive Furniture	122.00
	1200W x 300D x 1200H - 3 adjustable shelves	Dickens Constructions	165.00
	900W x 300D x 1800H, 1 or 2 fixed shelves, 3 or 4 adjustable shelves	Henry Bills & Co	170.00
	Bookcase/wall unit, 900W x 1800H, upper section to contain bookshelves with a depth of 300 and lower section to consist of a cupboard unit approximately 450D with 2 sliding doors	Henry Bills & Co	234.00
	Locks for cupboard door (cost per door)		35.00
Disk Storage	Blank plastic containers similar to video cassette storage boxes. Ideal for standardising the storage of program disks and associated material, which can then be suitably catalogued and loaned out for classroom use. Costs below include freight. Volume discounts apply.	QuickCopy Audio Services, PO Box 8499, Perth Business Centre, Perth WA 6849 Ph (08) 9328 2266 Fax (08) 9227 8881	
	Model A5-D: stores 3.5" and/or 5.25" floppy discs and A5 size text		7.45
	Model A5-CD: stores a CD-ROM or audio CD and A5 size text		7.45
General Disk Storage	Accodata Networks lockable boxes (typical of many similar products)	Corporate Express, 140 Murray Street Hobart Tas 7000	
	40 disk capacity		4.95
	80 disk capacity		6.60
	Multimedia box to suit CDs		8.15

Table of Contents

[Home] [Contents] [1. Introduction] [2. Learning Technologies Planning Team] [3. Arranging Computers in Classrooms]
[4. Desirable Classroom Architecture] [5. Furniture for Computer Requirements] [6. Electrical Issues] [7. Lighting]
[8. Security Generally] [9. Telephone System] [10. Purchasing Considerations] [11. Resource Schools: Case Studies]
[12. Acknowledgements]

education home

This page has been produced by the Facility Services Section.
Its content has been authorised by Richard Davoren, Manager (Facility Services).
Questions concerning its content may be directed by email to Richard.Davoren@central.tased.edu.au
This page was last modified on 27 October 2000.
The URL for this page is http://www.doe.tased.edu.au/facnet/guidelines/learningtech/direcfs3.htm
You are directed to a disclaimer and copyright notice governing the information provided.

Facility Services Section
Department of Education

Facility Guidelines for Learning Technologies

4. DESIRABLE CLASSROOM ARCHITECTURE

4.1 Space Issues

4.1.1 Introduction

One of the major problems encountered with early computer implementations in classrooms is that the classrooms have been designed to fit 30 students into a class at very close spacing to suit "chalk 'n' talk" style instruction.

With prevailing class populations, it may be impossible to free up sufficient space to install a typical complement of five to six computers plus a printer in the classroom of standard dimensions, although statistics will show that the respective school has ample average floor space per student. The usual reason for this anomaly is a declining enrolment coupled with rigidly conceived spaces.

4.1.2 Creating Space

A number of strategies may be adopted to create more space, but most will involve some building work and expense. Examples include:

- Move walls to enlarge classrooms.
- Move walls to create a shared computer space between classrooms.
- Open up rooms into the corridor, or move corridors.
- Eliminate cloakrooms or cloak partitions.
- Eliminate redundant sinks or fittings which are a legacy of historic room usage.
- Leave redundant doors permanently closed. Remove handles.

Be aware that any work that rearranges space may have fire or building safety implications. Do not proceed without professional advice and the necessary approvals.

Example of wall relocation

4.1.3 Structural Modifications

Where expansion of the class space is clearly necessary, and permitted by reallocation of surrounding room space, removal or relocation of walls must be considered.

The difficulty of moving walls will depend on the construction method used, and whether

the wall supports the roof structure or a floor above.

Schools should not modify structures. The Facility Services Section must be contacted in the first instance if this action is being considered.

Considerations include:

- Removal or relocation of non-load bearing timber or metal stud walls without embedded services like water or power is generally most straightforward. If the affected walls contain drainage, hot or cold water pipes, or power, the cost of relocation or disconnection of those services must be added to the costs suggested in examples below.
- Concrete blockwork and brick walls can generally be removed or relocated, but where construction comprises pre-cast concrete panels, wall relocation may be complex or impossible.
- Load bearing walls can generally be removed by providing steel or timber structural beams above the opening created.

In all cases where the walls are load bearing or "structural", the advice of a professional Structural Engineer must be sought (by law). Suitable engineers are those specifically advertising "Structural" services as listed under "Engineers-Consulting" in the Yellow Pages of Telstra telephone directories, with typical fees ranging from $75 to $90 per hour plus travelling and expenses.

Structural engineers will determine the structural modifications required to comply with relevant regulations such as the Building Code of Australia, and prepare plans for submission to the local Municipal Council for approval.

After any wall relocations or building extensions are completed, the revised floor plans showing dimensional details, wall and floor finishes must be submitted to the Facility Services Section for updating of the departmental building Assets Register.

Refer to the *School Management Handbook*, Section 221.6 for further details.

Estimated costs for budgetary purposes, including engineering fees, for selected modifications are indicated.

Example No.	Modification	Estimated Cost $
1.	Remove non-load bearing sheeted (plaster or similar) stud wall, up to 6000mm long x up to 3000mm high, and make good affected surfaces.	660.00
2.	Remove load-bearing sheeted (plaster or similar) stud wall, up to 6000mm long x up to 3000mm high, supply and install oregon timber beam of engineered size and make good affected surfaces.	1,200.00
3.	Remove load-bearing masonry wall (hard plastered both sides) up to 6000mm long x up to 3000mm high, supply and install steel beam of engineered size and make good affected surfaces.	3,000.00

4.1.4 Treatment or Elimination of Wet Areas

Care should be taken to site computers well away from sinks if they are in a classroom.

If this is not possible, one option would be to provide a free-standing screen covered with acoustic or Front Runner fabric, as is typically used for open office partitions. Apart from providing screening for the computers, it would also act as a pin-up board as well as a sound absorbing device. Such screens typically cost $300 each.

If sinks are a legacy of the past and no longer required, removal of the sink and bench below could create extra space. Estimated cost to remove a sink unit, seal off plumbing pipes and make good to disturbed surfaces is $400.

In high school science laboratories some latitude must be applied. Generally computers on bench walls should maintain a spacing of 2000mm from sinks.

4.1.5 Painting

Colour can have a direct influence on measurable physiological reactions. The human body responds to cycles of light and dark. In a setting where learning is taking place, colour can affect the participant's sense of time.

Any repainting of classrooms due to structural modifications should be in pastel colours that complement the desks. Art works and other soft furnishings should be co-ordinated with the desks, other furniture and background wall colour.

4.2 Floor Coverings

4.2.1 Issues

Some floor coverings may lead to a build up of static electricity on people in the room, which could "zap" computers through electrostatic discharge ("ESD"). ESD effects on computers depend on the computer construction and vary from model to model, and range from no effect through software lockup to corruption of stored data or physical damage to internal electronic circuitry.

Smooth, hard floor coverings like vinyl tiles can result in inadequate damping of keyboard clatter and other noises, and may lead to rolling tendency if ergonomic chairs on castors are used.

4.2.2 Static Treatment

Static build-up is often humidity related, and results when low humidity prevails. See "Environmental Issues - Humidity".

The static generating properties of floor finishes will usually be well known from past room usage. If occupants regularly receive shocks after walking across the room and touching metal objects like door handles or metallic window mullions and door frames, anti-static treatment should be pursued.

The extent of noise and chair stability issues must be assessed on a case by case basis against the furniture and room usage.

Static reducing mats for placing under computer keyboards are cheap and effective. Similar floor mats assist, but not if operators wear plastic or rubber soled shoes.

Static treatment products manufactured by the 3M company to reduce and/or eliminate static build-up are listed below, and may be sourced from:

TOPS Office & Business Systems
Head Office: 49 Sandy Bay Road, Hobart, Tasmania 7000
Hobart: Phil Morrisby - phone (03) 6234 8144; fax (03) 6223 3992
Launceston: Phone (03) 6331 2134; fax (03) 6331 1995

PRODUCT	COST $
Adjustable wrist straps with 1.5m practical extended length cord	35.51
Dissipative 3-layer Mats and Runners:-	
Floor Mat Model 8200 (1.2 x 1.8)	422.13
Floor Runner Model 8250 (1.2 x 7.2)	1067.85
Table Mat Model 8210 (0.6 x 1.2)	198.73
Table Runner Model 8260 (0.6 x 7.2)	660.08
Velostat 3mm thick Conductive Floor Mats for Hard Floors Model 1864:-	
0.6 x 0.8	116.78
1.2 x 1.8	312.51
1.2 x 2.4	407.97
Velostat Rigid Floor Mat 3mm thick Model 1880 (1.2 x 1.8)	522.59
Rigid Floor Mat for Carpeted Floors Model 9474 (1.2 x 2.4)	404.93
Computer Pad Model 9202 (59mm x 66mm)	122.86
Keyboard Pad Model 9212 (58.4 x 24)	90.49
Spray Cleaner for Mats Model No. 8001 per bottle	13.77

Prices above are for one-off quantities. Bulk discounts apply.

Because of fire safety considerations, not all carpets are suitable in all locations. Schools should therefore contact the Facility Services Section for advice prior to purchasing new carpet.

4.2.3 Fitting New Carpets

Carpeting is an effective tool to minimise noise in rooms generally. If re-carpeting of classrooms is being considered, it is essential to note the static-reduction qualities of available carpets. This aspect may be a more important factor in dedicated computer laboratories, but potentially can be just as big a problem where a few computers are spread out in general classroom situations, because of the movement of computer users around the classroom.

When choosing carpet, the term "anti-static" can be misleading. Anti-static carpet is designed to lessen static build-up, not eliminate it. Furthermore, some anti-static carpets are surface coated and humidity dependent. Coatings wear off under normal usage and become less effective with age.

Carpet is generally supplied in 3600mm wide rolls, and priced per lineal metre. Laying costs vary from $20 to $35 per lineal metre. An average cost of $30 per metre laying has been factored into the budgetary figures below.

Carpet types in order of suitability for rooms containing computers are:

PRODUCT	COMMENT	LAID COST $/m	LAID COST $/m²
Wool & Wool Blend (Zetron) Carpets	This type of carpet is rated as having the best anti-static and fire-retardant qualities.	135.00	38.00
Solution-dyed Nylon (non-staining) Carpet	A new carpet has been specially developed by Northstate Carpets and being installed throughout the 15 Murray Street Executive Building. Durability and appearance-keeping qualities under heavy usage was the major consideration factor in the development of this carpet.	130.00	36.00
Standard Nylon Fibre Carpets	Highest general use in most applications.	110.00	31.00
Polypropylene Carpet	The cheapest and least suitable in all respects and should be avoided in computer locations.	70.00	19.00

4.3 Noise and Acoustics

4.3.1 Issues

Computers produce noises which can be distracting in the classroom.

- Most computers have cooling fans which are annoyingly audible in a quiet room.
- Errors and particular mouse actions may cause bells or noises from the computer loudspeaker.
- Keyboards produce an annoying clatter when typing fast.
- Newer multimedia programs make extensive use of sound and sometimes video which can be very distracting if computers are placed adjacent to each other or next to students carrying out other tasks.

4.3.2 Acoustic Treatment

The sound of mice, keyboards, PC fans and printers is an unavoidable by-product of computer use, so acoustic treatment of the classroom is the only way of reducing the

impact. It may be that there is sufficient other noise from fan heaters or ceiling cooling fans, or general classroom noise from learning activities, to minimise the distracting effect of such computer noises.

If a problem is nevertheless evident, covering of acoustically reflective surfaces with sound absorbing materials will be necessary.

Possible measures include:

- Covering or replacing solid floor finishes like timber and vinyl tiles with carpet.
- Providing fabric covered pin boards or screens around computer areas.
- Providing drapes for windows.
- Acoustic covers can be purchased for impact (dot matrix) printers and noisy model inkjets. With the trend to quieter laser printers in government offices, disposal acoustic hoods lying around in government agency storage areas may be obtainable at little or no cost with some well placed enquiries.

4.3.3 Software Setup

Noises such as "bells and whistles" caused by computer programs or operating systems to verify mouse or keyboard action or computer status can usually be controlled in the following ways:

- Choose least intrusive options for operating system noises, and set to minimum acceptable volume if variable (eg a quiet beep instead of chiming cord or bells).
- Defeat or remove noisy screen savers (eg roaring dinosaurs, Star Trek).

4.3.4 Headphones

Interactive multimedia applications such as interactive books, language learning software or musical instrument sound exploration may use sound as an essential part of the program operation, and will create an amusement arcade effect in the classroom if simultaneously used side by side.

Headphones can be used instead of loudspeakers on such programs, the headphone plugging into the sound card on the computer much as headphones plug into a cassette recorder. Headsets with an inbuilt microphone are preferable where voice recognition or speech transmission is involved.

Unfortunately, headphones and headsets can be a medium for transmission of diseases, particularly ear infections. In most business situations where they are commonly used (like call centres and aircraft flights), every individual is issued with their own personal headset which is not shared with other people, or the headphones feature removable ear muffs which are replaced before passing on to another person, either by way of disposable muffs or sanitisation before reuse.

Schools using headphones and headsets must thus have an effective infection prevention strategy in place.

4.4 Environmental Issues

4.4.1 Introduction

Fortunately, what is good for computers is generally also best for humans, but computers can be less tolerant than humans to sub-optimal working environments, and they stay at school overnight and on weekends whilst the humans are away.

Conditions such as cold, heat, dust and grime which are unpleasant for students can cause problems for computers and peripherals like printers.

As a rule, conditions which are hazardous to computers will be obvious through sight, touch or smell.

Awareness of the issues below should allow sensible measures to be determined to minimise computer maintenance costs, even if environmental treatment is not affordable.

4.4.2 Temperature and Humidity

Inadequate or excessive humidity can affect paper handling and print quality of printers. Inadequate humidity can also promote static electricity generation.

In Tasmania poor humidity control often occurs in winter, where humidity climbs when heating is switched off overnight and on weekends, and falls very low during the day as air is warmed by heaters without supplementary humidification systems.

Uncontrolled warming will occur through the heat generated by computers, but this is more significant in computer labs or small dedicated computer resource rooms.

The presence of students in a room will generally increase humidity due to water vapour contained in breath.

4.4.3 Environment Treatment

Creation of an environment generally requires reasonably sophisticated air conditioning. However, *ideal* conditions are normally not required. Government policy is that Tasmanian schools are not air cooled.

Temperature rise in computer resource rooms and computer laboratories without air cooling can be minimised by locating such rooms on the south facing side of the respective building. Opening widows and allowing natural air flow will assist in warmer weather, but fly screens are advisable and sealed or grassed surfaces must prevail outside as dust blown in can create havoc with computer screens and internal mechanics.

Humidity control may be difficult to deal with, and treatment of the effect rather than the cause may be the only practical course of action. This could include:

- Choosing printers and paper which are more tolerant of humidity fluctuations.
- Applying anti-static treatments.

4.4.4 Dust

Computers are particularly susceptible to damage or malfunction in dusty environments.

Problems include:

- Dusty air is drawn in to the computer by cooling fans, and build-up of dust deposits on fans and moving parts like disk drives and fan bearings can cause malfunction or failure.
- Ordinary keyboards (as opposed to especially sealed types) are not tolerant of dust deposits building up behind keys, and cleaning keyboards is not straightforward. A key will stop working if dust builds up or a single grain of grit lodges behind it.
- Conventional (electron beam) computer screens have high voltage components inside them and electrostatically attract dust and other airborne particles to themselves. Screens will get dirty after some time, even if operated in a seemingly clean room.

Measures to avoid problems include:

- Keep computers at least 2 metres away from traditional blackboards.
- Keep windows and doors closed if dust is blowing around outside.
- Keep unpaved or unplanted areas outside classrooms damp, plant grass, or keep windows shut.
- Minimise dust from building activity in the vicinity of computer installations, or move computers if unavoidable.

Dust build up on keyboards and monitor screens should be cleaned off at regular intervals using mist-spray window cleaner and tea-towel material. Special products like 3M 675 Screen Cleaner are also available. Dust build up on screens causes image blurring and loss of brightness, which may lead to eye strain.

Table of Contents

[Home] [Contents] [1. Introduction] [2. Learning Technologies Planning Team] [3. Arranging Computers in Classrooms] [4. Desirable Classroom Architecture] [5. Furniture for Computer Requirements] [6. Electrical Issues] [7. Lighting] [8. Security Generally] [9. Telephone System] [10. Purchasing Considerations] [11. Resource Schools: Case Studies] [12. Acknowledgements]

education home

This page has been produced by the Facility Services Section.
Its content has been authorised by Richard Davoren, Manager (Facility Services).
Questions concerning its content may be directed by email to Richard.Davoren@central.tased.edu.au
This page was last modified on 25 October 2000.
The URL for this page is http://www.doe.tased.edu.au/facnet/guidelines/learningtech/direcfs4.htm
You are directed to a disclaimer and copyright notice governing the information provided.

Facility Services Section
Department of Education

Facility Guidelines for Learning Technologies

5. FURNITURE FOR COMPUTER REQUIREMENTS

5.1 General Design

Furniture must have enough depth to accommodate a monitor and keyboard, and enough width for tower PC, screen/keyboard and mouse mat as a minimum. Preferably some space should also be available to rest student notes, and to allow the mouse pad to be placed on either side of the computer to cater for right and left handed users.

Current model PCs have larger screens and keyboards than prevailed on earlier models and thus occupy a larger footprint, making older furniture unsuitable.

Until touch typing skills are achieved, it is usually found that operational comfort is greater if the monitor is placed directly on the work surface, rather than sitting on a desktop computer. "Tower" style computers are best suited to such arrangements, but occupy a greater desktop footprint than "desktop" computers.

A means of tidying cables that interconnect the computer hardware is desirable.

5.2 Ergonomic Issues

5.2.1 General

The benefits of sitting comfort for school children and encouragement in appropriate posture are:

- To allow increased concentration on working tasks and happiness, without having to frequently change position to relieve pain or numbness
- To promote good long term postural practice that carries over to adult life.

Numerous studies and reports emphasise the need to ensure the best conditions for the back and other areas of the body during sitting so that pain or injury can be minimised or avoided.

5.2.2 Chairs

For good postural practice, it is a major objective in sitting, to reduce lumbar flexion to a minimum. During flexion in the lumbar spine such as in forward leaning sitting, higher pressure in a disc is exerted against the already stretched fibres of its annular body.

One conclusion from research is that the presence and nature of a backrest, especially its inclination (at least 100° to the horizontal) and effective lumbar projection (up to 40mm) is the most important factor in reducing low back stress when used in sitting.

In conjunction, the seat height should be adjustable to arrive at a height equal to the lower leg length of the sitting person, the seat inclined backwards 5°-7° to the horizontal to help resist sliding forward when leaning against the backrest, and have well-rounded edge along the front.

Given that these computers will only be used from time to time by any one student, ideal seating and operational comfort may be less important than for general reading and writing.

5.2.3 Desks

There is not one definitive "formula" producing optimum table heights. Studies have shown that generally having a table surface too high is a lesser problem than too low as the arms will easily accommodate a variety of heights above the resting elbow height. However, where computer use is concerned, a keyboard which is too low is easier to operate than one which is too high.

Another consideration is the allowance of sufficient clearance above the sitting surface for free leg movement.

5.2.4 Recommended Dimensions

A draft Australian Standard DR 96007 - DR 96009 for "School and Educational Furniture" was issued in January 1996, but as yet has not been finalised into a formal Australian Standard. It is based on work by the Australian Furnishing Research and Development Institute and is based on BS 5873 Part 1 and BS 4875.

Dimensional and strength requirements are specified, and test methods are given for furniture manufacturers. The size and height dimensional recommendations of the standard are contradicted by Education Furniture Research published by Sebel Furniture, 1995. Practical experience suggests that the chair heights recommended by the draft standard are at least 10% too low for comfortable computer use, and differ from standard product sizes currently manufactured in Australia, so the Education Furniture Research recommendations have been adopted in the table of recommended dimensions below, whilst draft standard table heights and sizes are used.

RECOMMENDED DIMENSIONS:

TABLE SIZE RATING	STATURE RANGE mm	TYPICAL GRADE	SEAT HEIGHT mm	TABLE HEIGHT mm	TABLE OR ISLAND BENCH DEPTH mm	WALL BENCH DEPTH mm
1.	1000-1120	Kindergarten	295	460	750	850
2.	1120-1300	Grades Prep, 1 and 2	335	520	750	850
3.	1300-1480	Grades 3-6 Primary	395	580	750	850
4.	1480-1620	Grades 7-8 Secondary	405	640	750	850
5.	1620-1760	Grades 9-12 Secondary	445	700	750	850

Wall bench depth is greater than table depth as there must be sufficient clearance behind computers to accommodate protruding rear cables and connectors, which is not a problem with loose or island furniture where the back edge can be moved out from the wall by 100mm.

Where furniture may be used by a wide age or stature range, height adjustable furniture is the ideal solution. A cursory survey of personal chair height preferences around an office showed height adjustable chairs typically adjusted between 460 and 480mm high when used by adults operating computers all day with a fixed height 700mm desk. Height adjustable chairs should be considered essential for older students spending an hour or more at a computer per day.

It may be necessary to provide fixed furniture at a compromise height to suit a wider range of grades than the above table suggests, so recommended compromise dimensions are detailed below. Cushions would be needed to raise sitting height for students at the lower end of the grade range.

RECOMMENDED COMPROMISE DIMENSIONS:

TYPICAL GRADE RANGE	SEAT HEIGHT mm	TABLE HEIGHT mm	TABLE OR ISLAND BENCH DEPTH mm	WALL BENCH DEPTH mm
Kindergarten, Prep, 1 and 2	335	520	750	850
Grades 3-6 Primary	395	580	750	850
Grades 7-10 Secondary	445	680	750	850
Senior Secondary	400-500 adjustable	700	750	850

5.2.5 Recommended Colour

Colours of desk surfaces, if dark and providing big contrasts with reading material, can cause visual fatigue and resultant headaches. Desks manufactured out of light coloured laminate with a matte finish are considered the most suitable for visual comfort.

The draft standard suggests preference should be given for colours with a warm bias or "yellowish". Recommended colours are shades of grey, greyish yellow, and greyish yellow-green. Black surfaces or very dark timber finishes are clearly not preferred.

5.2.6 Recommended Strength

Furniture must be strong enough to allow at least one adult person or two children weighing about 82 kg to stand on each 500mm section of table length without damage or surface deflection of more than about 4 millimetres. The strength recommendations take into account that people will sit on bench edges whilst chatting to others using computers, or may move computers aside to put up wall decorations.

To meet this requirement laminate finish particle board must have steel channel or solid timber framing under the front edge for spans between supports or desk widths over 1200mm, in addition to rear support from a wall or modesty panel. As timber rails tend to be too thick, and cause obstruction to thighs as chairs are pushed in occupied by taller people, the use of smaller square cross section ERW (Electric Resistance Welded) tube as generally used by joinery manufacturers is recommended for framing.

5.2.7 Other Issues

Aside from the comfort factor, seating needs to address the problems associated with viewing the computer screen. The angle of vision should not be so great as to cause neck pain from exaggerated viewing angles. Tower computers provide greater flexibility than desktop computers in this respect.

Plastic chairs can cause static electricity generation problems, leading to keyboard "zapping" and possible damage.

Flexibility can be gained through the use of standard height adjustable ergonomic seating. Such chairs are normally equipped with castors to allow mobility, but this may be considered inappropriate (may be subject to abuse by the students).

5.2.8 Conclusion

As there will always be students who because of their stature will remain uncomfortable using the standard supplied furniture, it follows that the solution lies in the provision of adjustable ergonomic furniture.

If budgets are tight, schools should at least consider the provision of basic ergonomic chairs as a compromise solution.

However, it is also understood that it is up to the individual students to utilise supplied furniture in the correct fashion. If the school provides ergonomic furniture for student use, it has fulfilled its part in minimising potential OH&S problems.

It is expected that due to funding constraints, most schools will be forced to use existing

furniture, modified if necessary by extending or shortening table legs, using cushions to provide chair height adjustment for standard classroom chairs.

5.3 Constructing New Benches

5.3.1 General

Some schools will decide to install the new computers on fixed-height benches in one location within classrooms. Bench depth of benches built against a wall should not be less than 800mm, and preferably 900mm.

Heights should be as in the "Recommended Compromise Dimensions" table in section 5.2 above, and strength and colour recommendations observed.

5.3.2 Typical Plan

A typical bench construction plan is given below. Although the plans show melamine surfaced fibreboard or "Decorwood" for work surfaces, varnished particle board or plywood are popular alternatives.

Bench Plans:
Corner 1
Corner 2
Linear

5.4 Storage

Application program disks and resources for use in classrooms, will generally be catalogued and housed centrally (eg at the Library) and dispensed as required, so storage requirements for classrooms are relatively minor.

It is envisaged that supplies like printer cartridges and paper for individual classrooms will be replenished from the school central store as necessary.

Where the classroom is detached from the main school building and inconveniently distant from the central store, some local consumable storage will be required. Usually space in existing stores will be available, but an additional laminate cupboard in the classroom could be provided if storage space is at a premium already.

5.5 Furniture Costs

5.5.1 Budgetary Summary

Furniture prices below are based on SPS contract pricing for furniture with standard grey or beige melamine tops on powder-coated steel framing.

ITEM	DESCRIPTION/SIZE	COST $
Fixed-height Table	1200mmW x 750mmD x 700mmH	110.00
Fixed-height Table	1500mmW x 900mmD x 700mmH	99.00
Fixed-height Table	1800mmW x 900mmD x 700mmH	128.00
Fixed-height Bench	2400mm long x 800mm deep bracketed to a wall and supported by three powder-coated steel legs fixed to the floor, and fitted with suitable PVC Impact Edging (18mm thick Decorwood from Laminex Industries is obtainable in sheet sizes of 2400mm x 1800mm)	300.00 (typical installed)
Chairs	Standard height-adjustable student chairs without arms	119.00
Storage	Lockable laminate cupboard 900L x 700H x 450D	185.00

5.5.2 Desk Suppliers and Products on SPS Contract F247

* Denotes non-contract supplier.

PRODUCT	SUPPLIER	CONTACT	PHONE	FAX	COST $
Steel-framed, fixed height, sizes available include as below	Turner Industries Kings Meadows	Ken Turner	6344 5233	6343 1890	
1200W x 750D x 700H					99.00
1500W x 900D x 700H					110.00
1800W x 900D x 700H					128.00
1650W x 700D x 700H					175.00
1500W x 750D x 700H					175.00
Height-adjustable desk (manual operation)	* Witt Design Pty Ltd	Allan Witt	6273 2266	6273 9877	
Standard size - 1500W x 900					600.00
Options available:					
- varied sizes					POA
- fixed height shelf at rear					85.00
- height-adjustable					125.00

shelf at rear			

5.5.3 Height Adjustable Chairs SPS Contract C117

ITEM	SUPPLIER	CONTACT	PHONE	FAX	COST $
Student keyboard operator's chair, without arms, upholstered in 100% woollen fabric, gas lift seat height adjustment, manual back height adjustment, but no back angle adjustment - Model OCR 701	Office Chairs and Repairs, Launceston	Bill Springer	6334 6065	6334 6067	119.00
Keyboard operator's chair, without arms, with fire retardant foam, upholstered in 100% woollen fabric with gas lift seat height adjustment and 5-star base with castors	Office Chairs and Repairs, Launceston or Program Executive Furniture, East Devonport	Bill Springer Don Oliver	6334 6065 6427 0433	6334 6067 6427 0433	POA
Options include: - low, medium and high back - no tilt or tilt back					POA

5.5.4 Contract F247 Bookcase Units

PRODUCT/SIZE	SUPPLIER	CONTACT	PHONE	FAX	COST $
900W x 300D x 1200H	Tas Executive Furniture, Hobart	Tony Sorrentino	6273 1988	6272 2578	155.00
1200W x 300D x 1200H	Dickens Constructions, Launceston	Simon Finn	6339 1733	6339 2872	165.00
900W x 300D x 1800H	Henry Bills & Co, Launceston	John Hill	6331 7377	6331 9895	170.00
Bookcase/Wall Unit	Henry Bills & Co, Launceston	John Hill	6331 7377	6331 9895	234.00
Standard cupboard door lock - estimate each	All of above suppliers				35.00
Cupboard - horizontal, slab construction, 2 sliding doors, 1 adjustable shelf -	All items obtainable under SPS Contract F247				
900L x 700H x 450D	Tas Executive Furniture, Hobart				155.00
1200L x 700H x 450D	Tas Executive Furniture Hobart				175.00
1800L x 700H x 450D	Henry Bills & Co, Launceston				233.00

5.5.5 Decorwood Shelving Panels

PRODUCT/SIZE	SUPPLIER	CONTACT	PHONE	FAX	COST $
2,400 x 1,800 x 18 thick - standard colours all same price per m²	Laminex Industries, Hobart	Steve Hardman	6244 5255	6244 6200	21.95
Pre-glued edging to match sheeting, 25m roll					19.25
Pre-glued edging to match sheeting, 100m roll					74.00

5.5.6 Acoustic Screens SPS Contract F247

To screen off wet areas or computer areas of libraries.

PRODUCT/SIZE	SUPPLIER	CONTACT	PHONE	FAX	COST $
Varying sizes and options available - contact supplier for full details and pricing. Covered in Frontrunner fabric.	Tas Executive Furniture, Hobart	Tony Sorrentino	6273 1988	6272 2578	POA

5.5.7 Bench Support Brackets

PRODUCT	SUPPLIER	COST $
HCB0500ZP stayed bracket (500mm x 500mm) for supporting benches up to 850mm deep (Refer to sketch)	K & D Warehouse Mitre 10, Hobart & Derwent Park Plus Most hardware outlets generally	17.00 Ea

Table of Contents

[Home] [Contents] [1. Introduction] [2. Learning Technologies Planning Team] [3. Arranging Computers in Classrooms] [4. Desirable Classroom Architecture] [5. Furniture for Computer Requirements] [6. Electrical Issues] [7. Lighting] [8. Security Generally] [9. Telephone System] [10. Purchasing Considerations] [11. Resource Schools: Case Studies] [12. Acknowledgements]

education home

This page has been produced by the Facility Services Section.
Its content has been authorised by Richard Davoren, Manager (Facility Services).
Questions concerning its content may be directed by email to Richard.Davoren@central.tased.edu.au
This page was last modified on 25 October 2000.
The URL for this page is http://www.doe.tased.edu.au/facnet/guidelines/learningtech/direcfs5.htm
You are directed to a disclaimer and copyright notice governing the information provided.

Facility Services Section
Department of Education

Facility Guidelines for Learning Technologies

6. ELECTRICAL ISSUES

6.1 Power Wiring and Computer Requirements

6.1.1 Power Point Distribution and Location

Classrooms designed in the last ten years have usually been fitted with some provision for earlier computer network cabling like "Econet" and "Tasnet" where associated power points have been installed, but on average classrooms predate educational computing and are equipped with very few power outlets.

Power points have frequently been placed a little above floor level, typically 300mm above the floor. This height may be inconvenient if desks with computers on them are to be pushed against the respective wall, as students may kick the plugs out of the power points accidentally and getting at the power points is awkward if devices need to be switched off at the power point.

6.1.2 Power Wiring

A typical power point can supply up to 10 Amps of current, or six computers sharing a power point using a power board. Usually the building wiring joins a number of power points together to one fuse or circuit breaker "circuit" on the local electrical switchboard, yielding a total capacity of 15 Amps or up to 10 computers per circuit.

On newer switchboards, earth leakage detection switches known as "residual current devices" or "safety switches" are often provided as a safety measure.

Switchboards are fed from the school main distribution board (where the "hydro" comes into the campus) through cables called sub-mains. In older schools, adding a large number of computers may overload the sub-mains, or require more fuses or circuit breakers than the spare capacity of the switchboards permits.

6.1.3 Computer Power Connections

Until recently many computers could be powered from a single power outlet.

With the growing use of multimedia computers and peripheral accessories, more sockets are needed, and in many cases the purchase of power boards will be necessary even where a double power outlet is available at the computer location.

Most recent model computers require separate sockets for:

- Central processor
- Screen
- Loudspeakers

External peripherals which may also be connected to the computer and require power connections include:

- Printer
- External modem or ISDN terminal adaptor
- Scanner
- External tape backup
- External CD-ROM (including writable CD-ROM)
- Video camera
- Video tape recorder

One double power socket per local area network socket should be considered an absolutely minimal provision, and will still require power boards when all the local area network sockets in the vicinity are in use with multimedia computers.

In administrative offices, the additional power connections required by fax machines, answering machines, mobile and cordless phone battery chargers, calculators and other office equipment makes three double outlets per work station the recommended provision.

6.1.4 Computer Electrical Loads

Computers require from 1.0 to 1.5 Amps of 240V mains power each, and are susceptible to power fluctuations. Five computers create a roughly equal loading to a 1.5 kW (small column heater), and eight computers create a load the same as a 2.4 kW heater (large column heater or fan heater).

Filters inside some computers also cause a small amount of earth leakage current, and too many computers connected to one circuit can cause safety switches to cut out.

Notebooks can usually run for several hours from internal batteries if those batteries are fully charged and new, but typically they will require connection to mains power within an hour of battery operation.

If power is lost whilst a computer is saving data, that data file, and possibly other data files on the computer's hard drive, will be corrupted, and the tedious and sometimes difficult task of identification and restoration of corrupted files will need to be undertaken.

Computers can exhibit strange behaviour if the power fails momentarily, then restores, and sometimes equipment damage can result if the computer is left on unattended.

6.1.5 Uninterrupted Power Supplies

Uninterrupted power supplies (UPS) contain backup batteries to keep connected loads working if a power outage occurs. They are usually the size of a tower PC.

The power consumption of a typical UPS used in a school would generally be low enough to allow it to plug into a power point, whilst output distribution is typically by means of soft wiring, or servers plugged directly into sockets on the back of the UPS.

Distribution of UPS power output through fixed building wiring would rarely be justifiable except perhaps in large college and university network/server rooms.

6.2 Issues Arising

6.2.1 General

Issues arising from the power requirements of computers include:

- More power points are usually required. Experience with Lighthouse Schools suggests one per six students on average through the school.
- Power is essential for deployment of computers, but schools need to fund the provision of power outlets.
- Computer power points shouldn't be shared with other equipment if possible.
- Power points need to be installed at a suitable height.
- Overload may result if extra power points are simply added to existing circuits.
- Computers should be switched off overnight or when unattended.
- Uninterruptible "backup" power is required for servers and ideally campus hub equipment.
- Switchboards and sub-mains may require upgrading in some cases.
- All alterations or new electrical work must be undertaken by a licensed electrical contractor.

6.2.2 Existing Wiring

On existing wiring, computers may plug into a power point which shares a circuit with other power points in the same room or other rooms. If heaters, photocopiers, laser printers or a large number of computers sharing a power board are plugged into other power points on the same circuit as some computers in one room, the fuse may blow (or circuit breaker trip) when everything is switched on simultaneously.

Power boards have some safety and reliability disadvantages over proper power points, and should be used sparingly, rather than as a widespread solution to power point shortages throughout a school.

6.3 Providing Additional Power Outlets

6.3.1 Location and Quantity of Outlets

The current guideline for provision of power points in new classrooms is:

- One double point per network outlet socket. A double network socket would thus require two double power points (suggested 300mm to either side of network outlet plate).
- One dedicated circuit (switchboard fuse feeding multiple computer sockets) per classroom.

- Earth leakage (residual current) protection on the first outlet on a circuit after the switchboard.
- Marking of outlet plates to identify them as computer points only (eg by using coloured plates, engraving the plates "Computers", or fitting identification press in studs like a red stud marked "C"). The marking must not depend on the presence of snap-on covers.

There is also a departmental preference for the use of outlet plates manufactured by PDL, whose switch plates and other fittings seem more resistant to the inserts being pushed back than other brands.

Whilst these policies may be practical in building refurbishments and new buildings, they are not always suited to the addition of an extra power point here and there in selected areas.

A minimum requirement must be one power socket per network outlet (or one double power point per dual socket network outlet). The use of more recent 4-socket power points may be a practical cost saving solution to complement double network outlets.

6.3.2 Implementation Procedure

The approach in existing areas should be as follows.

Set budget

a. If initially doing advance planning, set a budget of about $15 per full time student to arrive at a forward planning first estimate.

Plan locations and estimate cost

b. Once the network outlet locations have been decided, or at the same time as finalising network outlet locations, note all network points where power outlets don't exist, or where only a single outlet is available.
c. Plan to convert existing single gang power points near network outlets to double or four gang plates.
d. Plan to provide at least two double power points per double network outlet, but where the main focus of computing is anticipated, provide one additional double power point for every two double network outlets.
e. Total up the number of extra outlets, and budget $30 to change each single point to a double point, and $90 to add new double power points.
f. If available, retrieve electrical schematics and location plans from original construction plans which should be stored at the school, or available from microfilm or electronic Facility Services records.

Implementation

g. If you don't wish to get further involved at this point, delegate the planning and management of additional outlets by engaging a Consulting Electrical Engineer (listed in Yellow Pages of phone directory under Engineers Consulting - Electrical or Building Services), who will work out what needs to be done, set and agree budgets, and manage the works on the school's behalf.

h. Armed with information on existing and proposed wiring, obtain advice from electricians familiar with the school on existing switchboard capacity, sub-mains and circuit loadings, and determine to what extent existing power points are used for heating or heavy load equipment like fridges and photocopiers.
i. Based on an average loading of 500VA (volt-amps) per double outlet, ask the electrician to determine the extent that power points can or should be added to existing circuits, or new circuits added to existing switchboards.
j. If the switchboards are clearly older than 30 years old (for instance comprising fuses and bare switches mounted on black Zelemite panels), or if the electrician advises that wiring or circuits are old or close to maximum capacity, obtain professional advice through the Facility Services Section on an appropriate upgrade strategy which considers the energy needs of the school as a whole and not just computer wiring, to ensure that upgrades only happen once in a targeted manner which don't leave underlying problems for future administrations. For instance, a cost effective option to replacing switchboards that are or will be overloaded is the installation of gas heating to replace electrical heating in some classrooms.
k. If any computer resource areas are being planned, consider providing a master key switch near the door to allow all computers to be switched on in the morning or off in the evening without having to operate switches on every machine.
l. If budgetary constraints prevent adding all outlets at once, plan to do only those areas where the first instalment of computers will be placed, and defer other works till later.
m. Having obtained advice on scope of work, place order on electrician or engage engineers to manage and implement the works on the basis of ad-hoc additions to existing wiring where few new outlets are required, or a maximum of eight double outlets per circuit. Height of power points above floor level should match that decided for network outlets.

Use multi-point power boards to cover itinerant concentrations of computers or any oversight in the planning process.

6.4 Flexible Furniture Placement

6.4.1 Electrical Issues with Unfixed Furniture

Sometimes it will be desirable to locate computers along a bench or a group of desks coming out in a peninsula arrangement from a wall, with power being supplied from a single point on a wall at one end of the arrangement.

In selected circumstances like libraries and GP hall stages, a group of desks, carrels or a bench may be in the middle of an open floor space, fed by either a floor or ceiling mounted outlet typically in the centre of the arrangement.

The furniture could be moved or rearranged without the need to involve an electrician or licensed communications cabling contractor.

Typical instances include:

- Arrangements in large rooms where it is necessary to fill the central space of the room with computers rather than (or as well as) the perimeter. This could include traditional computer laboratories and musical instrument laboratories.

- Flexible office work station arrangements.
- Itinerant arrangements in science labs, where a bench with computers might be wheeled in for the duration of an experiment.
- Computers placed along a full height window wall which precludes wiring on the wall.
- Pre-wiring power and data infrastructure before future wall relocations.

6.4.2 Treatment

Cabling through furniture from a fixed point is best dealt with using so called "soft wiring" systems. These comprise:

- Special 15 Amp power outlet "starter" socket to match the soft wiring system, fed by a dedicated power cable from a local sub-board circuit breaker.
- Power wiring harnesses comprising purpose built power outlet and cord fittings which plug together something like "daisy chained" power boards.
- Long network fly leads to connect equipment to a cluster of data outlets.
- Cable management hardware comprising clips, hooks and Velcro tapes allowing the cabling to be suspended from the underside of the desk (or the wall if arrangement against a wall).

Fly leads may be up to 8m long, and can usually be supplied with fixed network cabling if the need is identified during outlet planning. Longer leads may be used if the network cabling to the local patch panel is shorter than 90m - 1.2 × lead length, which can be accommodated during outlet planning.

Up to six network outlets can be supplied on a standard electrical wall plate, but special plates accommodating up to twelve outlets are available. Such outlets are sometimes called Multi User Telecommunication Outlets or MUTO's.

A launching point (a special wall connection power point) for a soft wiring power harness would typically be installed by an electrician at the same time as installing ordinary power points elsewhere.

Soft wiring cables may be supported and managed by:

- dropping into a trough built into the rear of a bench;
- suspended under the work surface using self adhesive cable support loops or hooks with Velcro tape; or
- suspended under the work surface using plastic snap closing cable minder rings (also used on patch panel racks)

See diagram

Where a bench is hard up against a wall, feed-through holes will need to be drilled through the back of the benchtop to bring power and network cables through to the computer.

Furniture installed Power Modules can be connected to fixed wiring in a wall by the use of a Starter Socket. The TPS cable should be 2.5mm three core and be protected by a 20amp circuit breaker. Alternatively, a fully modular installation is achieved by using Starter Sockets pre-wired with Plug Lead. This would then be plugged into a Junction Box located

most likely in the ceiling space. See diagram

More information is available on the Panduit Web Site.

6.4.3 Soft Wiring Accessories

Soft wiring power rails are available with a number of inbuilt features and options including:

- Active Sinewave Filtering Technology - clips voltage peaks and fills voltage lags to protect equipment by delivering clean power.
- RCD Personal & Personnel Safety Switches - act as circuit breaker in the event of a dangerous power fault.
- Smartswitch facility - comprises a master outlet controlling up to 4 slave outlets. For example, turning a PC on or off can control printer, plotter, modem, monitor, etc.
- "PIR Sensing" or Personal Sensitive Task Light Control detects the presence of personnel within the vicinity of the desk and switches task lights on when activity is detected.
- Clamping brackets for fitting to most applications.

They can be purchased ready made for use with the pre-specified number and type of sockets.

Future expansion is catered for with each module manufactured with end power connectors and snap-in mechanical locators.

6.4.4 Products Sources and Costs

PRODUCTS FOR CABLE MANAGEMENT AND SUPPORT:

PRODUCT	SUPPLIER				PRICE $
"Wattmaster" 50mm x 50mm slotted plastic wiring duct, 2m length	Lawrence & Hanson, Hobart Phil Ferrier Ph 03 6234 2666 Fax 03 6231 1221	Launceston Ph 03 6331 4955	Devonport Ph 03 6424 1152	Burnie Ph 03 6431 1188	18.00
"AussieDuct" OS4060BS Base + TS40LD Lid Open Slotted Trunking, 2m length	Gordon Wood, Hobart	Similar products available most other electrical wholesalers			18.00
Panduit cable management products (very wide range, including slotted duct and Velcro tape)	Electrical Agencies GHE Electronics, Hobart Ph 03 6234 2233	Launceston Ph 03 6331 6533	Also available most other electrical wholesalers		
"Rip-Tie" cable catch (self adhesive Velcro tie) 5 pack	Datacom Warehouse - Freecall™ 1800 177 999				29.95
Mod-Tap cable management clips, rings Standard rack mount accessories can be screwed to walls and underside of furniture	GHE Electronics, Hobart Ph 03 6234 2233	Launceston Ph 03 6331 6533			3.50 to 6.00
Modempak cable management rings	WP Martin, Hobart Ph 03 6234 2811	Launceston Ph 03 6331 5545			6.00

This list is not exhaustive, and most electrical wholesalers will carry some suitable product.

SOFT WIRING PRODUCTS FOR FLEXIBLE POWER DISTRIBUTION:

PRODUCT	SUPPLIER	CONTACT	COST $
Schiavello Soft Wiring System * denotes Schiavello product	Office Technologies P/L, Melbourne	Steve Taffe Ph 03 9686 4070 Fax 03 9686 3679	
NGPM Power Module* (2 power sockets)			26.00
NGJB Junction Box* (used to split 3 ways)			13.33
NGSS Starter Socket*			13.33
NGPB Power Module Bracket*			5.00
Leads and sockets available in increments of 300mm			
NGEX300 (300mm)*			12.50
NGEX600 (600mm)*			13.00
NGEX900 (900mm)*			13.50
NGEX1800 (1800mm)*			15.00
NGEX2700 (2700mm)*			16.50
Elsafe Soft Wiring System ** denotes Elsafe product	Elsafe Australia Pty Ltd Brookvale, NSW	Ralph Weaver Ph 02 9938 5799 Fax 02 9938 6140	
Thin Power Outlets (auto switching)			
PB.2.BK**			29.48
PB.3.BK**			39.79
PB.4.BK**			50.97
Filtered surge protection power rails for fixing to furniture, etc** Units manufactured to specific requirements			from 136.00

Note: All listed products (by generic name rather than catalogue number) are available at either of the listed companies. It is important to obtain all components for an installation from the one source.

6.5 Electromagnetic Radiation Problems

6.5.1 Issues

Conventional "Cathode Ray Tube" (CRT) computer monitors are very sensitive to magnetic

fields. In the future it is likely that displays which are insensitive to magnetic fields like plasma panels and liquid crystal panels similar to those used in notebook computers will predominate, but for the time being most computers delivered under the Government's policy will have CRT monitors.

When CRT monitors are placed near steady magnetic fields like those produced by permanent magnets in ordinary loudspeakers, colour hue distortions will result, leaving a dull colour cast on the screen. The range of such effects can be up to several metres. Multimedia PC speakers use specially shielded magnets to minimise this effect.

Electrical transformers found in substations, and large electrical cables carrying heavy current such as sub-mains distribution between switchboards, cause alternating magnetic fields which can cause screen jitter on CRT monitors if they are close enough. Such jitter is unbearable to users after a few minutes at most. The same jitter can be caused by placing other electrical equipment within centimetres of a monitor, examples including monitors from adjacent computers or a second monitor, printers and backup tape drives.

6.5.2 Treatment

Sources of magnetic fields should generally be moved away from computers. Avoid locating computers too close to each other (say less than 1000mm apart).

If it is found that sub-mains are embedded in concrete floors or in ducts directly below areas targeted for computer placement, the following options are available if, after a trial computer installation, a problem is clearly present:

- Re-route sub-mains over a new route (probably a prohibitively costly option)
- Provide a magnetic shield (a special ferrous alloy metal box) for any affected computers
- Only use notebooks in such areas

Sometimes loops of ordinary power wiring in walls or ceilings can produce the same effect, and generally elimination of loops or alteration of cable routes will cure the problem.

The Hydro-Electric Corporation Protection and Test Division has magnetic field tracing equipment and trained staff who may be consulted (at cost) to trace any problems.

6.5.3 Electromagnetic Shields

PRODUCT	COMMENTS	SUPPLIER	PRICE/PC $
Electro-Magnetic Interference Protection Devices, suit up to 15 inch monitor	Claimed to eliminate image jitter, drift, and other effects caused by interference from ELF magnetic fields that may emanate from nearby office equipment (monitors, scanners, copiers and fluorescent lights), electrical cables, conduits and power transformers. The units are generally boxes that house the monitor (adjustable to suit a variety of models) and made of an alloy processed for high magnetic permeability.	Radshield Australia Pty Ltd PO Box 6528 Bundall, Queensland 4217 Ph 07 5571 1297 Freecall™ 1800 641 118 Fax 07 5571 1318	590.00

Table of Contents

[Home] [Contents] [1. Introduction] [2. Learning Technologies Planning Team] [3. Arranging Computers in Classrooms] [4. Desirable Classroom Architecture] [5. Furniture for Computer Requirements] [6. Electrical Issues] [7. Lighting] [8. Security Generally] [9. Telephone System] [10. Purchasing Considerations] [11. Resource Schools: Case Studies] [12. Acknowledgements]

education home

This page has been produced by the Facility Services Section.
Its content has been authorised by Richard Davoren, Manager (Facility Services).
Questions concerning its content may be directed by email to Richard.Davoren@central.tased.edu.au
This page was last modified on 25 October 2000.
The URL for this page is http://www.doe.tased.edu.au/facnet/guidelines/learningtech/direcfs6.htm
You are directed to a disclaimer and copyright notice governing the information provided.

Facility Services Section
Department of Education

Facility Guidelines for Learning Technologies

7. LIGHTING

7.1 Introduction

All types of computer monitors become more difficult to read in the presence of bright light, and are subject to reflection. Whilst lighting can be customised to suit screen-based activities in a purpose built computer laboratory, lighting in classrooms must cater for a range of activities which may take place simultaneously.

Studies have shown that cove lighting and task oriented lighting are the optimum choice. These do not produce direct glare or washes of light as much as overhead fluorescent fixtures, which reflect off the ceiling or walls.

Natural lighting is a good option provided that direct glare can be eliminated or avoided by placement.

7.2 Issues

Computer screens are best viewed in a dimmer environment, whilst white boards, text books and pads are best viewed in bright natural light.

Screens are difficult to view in the presence of strong backlight, as the human eye closes its pupil in response to the brightest light it sees.

Reducing sunlight entering rooms in winter can lead to increased heating costs or student discomfort.

The scanning action of the picture tube to create the image on computer screens and the normally unnoticed pulsating effects of normal alternating current mains powered lighting or flickering on faulty fittings can lead to subliminal stroboscopic effects which cause eye strain or headaches after protracted use.

7.3 Suggested Approach

7.3.1 Optimise Location

Avoid locating computers along or near outside window walls, especially north and east facing, unless effective sun control which does not compromise other classroom activities is available when computers are in use.

Locate computers so that screens are not facing the opposite windows, reflecting the light in windows.

Choose locations on non-window walls in preference to internal window walls if power and network cabling must be brought in from overhead.

7.3.2 Treatment of Lighting Problems

As students should only be working short term on computers, treatment of glare and reflections are more important than treatment of subliminal effects.

- Where ideal placement is prevented by other considerations, ensure that lighting can be controlled by blinds or curtains.
- Fit clip-on glare reduction screens to computer monitors if reflected light from windows cannot be adequately controlled by blinds.
- Repair or replace light fittings prone to flicker.
- If fluorescent light reflections are noticeable enough on screens to cause eye strain, a change of fluorescent fittings to a low glare type suitable for rooms with computers may be necessary. Recessed lights with flat diffusers may be refittable with glare reducing prismatic diffusers such as "K19". Light fittings suited to computer environments generally direct light downwards and appear quite dark when viewed from the side.
- Other lighting used in conjunction with fluorescent strips should be considered as an option.

7.4 Products, Prices and Availability

7.4.1 Blinds

For budgeting purposes, the following rates per square metre are suggested:

Type	$/m^2
Venetian Blind	80.00
Holland Blind	55.00
Reflective Blind	95.00

The table below details cost of various blind options. Generally standard window sizes are cheaper to fit than unusual widths or drops.

SIZE (mm)	COST		
	Venetian Blind	Holland Blind	Reflective Blind
900W x 1500D	$150.00	$90.00	$170.00
900W x 1800D	$154.00	$95.00	$174.00
900W x 2100D	$159.00	$100.00	$179.00
900W x 2400D	$162.00	$105.00	$182.00
900W x 2700D	$164.00	$110.00	$188.00
1200W x 1500D	$166.00	$115.00	$199.00
1200W x 1800D	$168.00	$121.00	$208.00
1200W x 2100D	$176.00	$126.00	$217.00
1200W x 2400D	$188.00	$131.00	$228.00
1200W x 2700D	$196.00	$136.00	$239.00
1500W x 1500D	$212.00	$140.00	$250.00
1500W x 1800D	$224.00	$143.00	$261.00
1500W x 2100D	$238.00	$146.00	$269.00
1500W x 2400D	$252.00	$149.00	$278.00
1,500W x 2700D	$275.00	$153.00	$285.00

There are no SPS contracts in place. Obtain quotes from suppliers below:

SUPPLIER	CONTACT	PHONE	FAX
Window Decor, Hobart	Terri Goodman	03 6234 1077	03 6234 9017
Bonniwell Blinds, Hobart		03 6272 0577	03 6272 0156
Bonniwell Blinds, Launceston		03 6331 2977	03 6334 2083
Bonniwell Blinds, Devonport		03 6424 7070	03 6424 7003
C & D Blinds, Hobart		03 6273 3435	03 6272 2521
Tas Blinds & Screens, Launceston		03 6344 2488	03 6344 9472
Tas Blinds & Screens, Burnie		03 6431 6664	03 6431 6665

7.4.2 Light Fittings and Diffusers

Light fittings would normally be purchased by installation contractors to suit customer requirements (defined as being 'suitable for use in rooms where VDU screen based activities take place'). Some schools with their own maintenance capability will have

accounts with lighting wholesalers.

Suppliers can be found in the "Yellow Pages" of the telephone directory under "Lighting and Accessories - Wholesalers &/or Manufacturers".

7.4.3 VDU Glare Control Screens

Older computer monitors may also have exhibited an arguably unhealthy level of screen radiation, but with the low radiation monitors now being purchased under the Government's policy, schools need not be concerned about the electromagnetic health effects of new computers. Some glare control screens also treat screen radiation.

PRODUCT	COMMENTS	SUPPLIER	PRICE/PC $
Basic Anti-Glare Glass Screen Filter	Clip on glare control only.	Radshield Australia Pty Ltd PO Box 6528 Bundall, Qld 4217 Ph 07 5571 1297 Freecall™ 1800 641 118 Fax 07 5571 1318	25.00
Basic Monitor Screen Shield	Clip on unit. Eliminates glare with minor radiation control qualities. Several models.	Radshield Australia Pty Ltd	50.00-99.00
Radshield Spectrum and Krystal Vue Screen Filters	Clip on wrap-around unit. These are claimed to be anti-radiation, anti-glare, anti-reflection, and anti-static optical glass filters, which protect the users from eye-strain and headaches caused through computer usage.	Radshield Australia Pty Ltd	108.00-135.00

Table of Contents

[Home] [Contents] [1. Introduction] [2. Learning Technologies Planning Team] [3. Arranging Computers in Classrooms]
[4. Desirable Classroom Architecture] [5. Furniture for Computer Requirements] [6. Electrical Issues] [7. Lighting]
[8. Security Generally] [9. Telephone System] [10. Purchasing Considerations] [11. Resource Schools: Case Studies]
[12. Acknowledgements]

education home

This page has been produced by the Facility Services Section.
Its content has been authorised by Richard Davoren, Manager (Facility Services).
Questions concerning its content may be directed by email to Richard.Davoren@central.tased.edu.au
This page was last modified on 25 October 2000.
The URL for this page is http://www.doe.tased.edu.au/facnet/guidelines/learningtech/direcfs7.htm
You are directed to a disclaimer and copyright notice governing the information provided.

Facility Services Section
Department of Education

Facility Guidelines for Learning Technologies

8. SECURITY GENERALLY

(See also the Department's Security Handbook.)

8.1 Introduction

The widespread provision of "state of the art" computers throughout schools, with accompanying publicity, may bring unwelcome illegal activity. This may be especially significant for those schools which in the past have experienced few problems with theft and burglary.

8.1.1 Important Security Issues

Because it is not practical to secure more than a small number of computers by keeping them on trolleys and wheeling them into secure storage areas overnight, schools must take steps to minimise risk and be aware of the following issues:

- Provide adequate intruder detection, able to detect illegal entry into any room.
- Ensure there is alarm response by a security patrol within a reasonably short time on receiving an alarm. All schools should use the Department's state-wide contractor for this service.
- Prohibit entry into computer labs and other such areas to community groups and clubs using the school after-hours.
- Lock classrooms and other areas where computers are located outside school hours, so that even if access is gained at one point, further access to other rooms is hindered.
- Be aware of potential theft (including internal components) by students, other "authorised" users and visitors during normal school hours.
- Potential theft of internal computer components (especially central processors and memory).
- Provide blinds and window-door covers so that computers aren't visible to passers-by after hours.

Implementing all measures suggested in this section may not be feasible, so school administrators should set priorities for the security measures they will adopt. This should be based on probability of occurrence, and value of equipment or intellectual property at risk.

Although it is generally the responsibility of schools to maintain and replace items of

equipment and to meet the cost of damage or loss up to $5,000 per event, **the conditions of insurance and associated school responsibilities associated with centrally funded computers supplied through the Government's policy remains to be confirmed.**

Contact the Facility Services Section for further information on all aspects of security policy and implementation.

8.2 Intruder Prevention

8.2.1 Door Locks

Ideally each classroom should have a lockable door, keyed to a restricted-profile master keying system. If not on a master key system, computer room locks should use registered restricted-profile keying to prevent unauthorised copying.

By regulation all classrooms must have free handle egress to permit emergency escape at all times.

Where doors must be magnetically locked (as an alternative to crash bars), break-glass emergency release points must be fitted.

- **Maintenance**

  Be aware of the importance of preventative maintenance:
  - deadlocks not operating correctly - openable by a ruler, card, or other flat object is very common;
  - doors not fitting properly - therefore locks not operating correctly;
  - use locksmiths for all lock maintenance (the handyman often tends to oil locks, which can damage them).

8.2.2 Windows and Skylights

- **Windows**

  Windows must always be a factor when considering building security. In the context of today's high crime levels, it may be necessary to provide special frame and glass treatment.

  Always close blinds and cover door-windows after hours so that computers are not visible to passers-by.

  Windows should be fitted with catches or locks which require two hands to open. They should also be difficult to open or undo by applying force to the window frame or breaking a small hole near the catch to allow it to be reached. Window winders provide a measure of security.

  If it is not necessary to open it, screw it shut!

  Where particularly sensitive equipment or a large amount of computer equipment is located in rooms with easily accessed windows, consider fitting external security bars or steel mesh.

- **Types**

  Many types of windows have been used over the long period of building construction in the Department, usually with little thought for the security viewpoint. The result today is that many types offer little protection against illegal entry, making some buildings very vulnerable. An assessment should be made on the degree of risk they present. Generally windows and glass doors directly at ground level are most vulnerable, with difficulty of entry increasing as widows are high enough to be out of easy reach from the ground.

  Those offering best security include:
  - Fitted, non-opening
  - Awning
  - Sash (lift-up), with opening restricted to 120 mm

  Those providing poorest security:
  - Older style wooden construction, all kinds
  - Sliding type
  - Louvre windows - should be avoided at all costs

- **Skylights**

  The possibility of access via skylights must be considered where these are present. External bars or grilles provide the best security. Rooms with skylights must always have security intruder detection.

8.2.3 Roofs

Entry through a roof usually avoids detection from internal security detection until the intruder drops down into secured rooms. An assessment of the risk of break-in via roofs, and any other obvious weaknesses is recommended.

8.2.4 Walls

Plaster board stud walls are easily punched through or penetrated by determined intruders, especially those with 'inside' knowledge. Instances of breaching brick walls are on record.

Where unsubstantial walls have been used around a computer lab or server room, supplementary security measures, including securing computers to desks or fixed furniture should be considered.

8.2.5 Telstra Cable Pits

In some circumstances protection of cable pits on Telstra underground service routes from the street into the premises may need to be considered. This is because the underground cable containing the school security dialler line can be easily accessed and cut inside the pit.

The usual measures are to padlock the cover, or fit a steel cover, suitable for padlocking, onto the pit body or surrounding concrete.

8.3 Intruder Detection

Many schools have intruder detection of corridors only. Whilst this may be adequate on low risk areas and upper storeys, all rooms which can be entered directly from outside should have intruder detection fitted. Be aware of the possibility of smash-and-grab tactics through a window, skylight entry, or by lifting the roof. The guidelines require that each detector is connected to its own circuit on the alarm panel, facilitating tracking of what happened during a break-in, and simplifying maintenance faults occur. (See also this site: Intruder Detection.)

Important Aspects:

- Extend the existing alarm system to cover all areas at risk, allow a budget figure of around $300 per detector. If there is no alarm system, one should be installed. Note that any such installation or extension must be in accordance with the Department's guidelines.
- All monitored alarm systems report via the telephone network to a monitoring central station. To secure such systems against phone line damage, larger schools and colleges should consider including a cellular backup which reports via the mobile phone network if outside lines are cut or damaged.
- Modern systems have the facility to isolate computer rooms from the main school 'opening' and 'closing' procedures, and may be configured to be only disarmed by authorised personnel. A special code would be used to arm and disarm the nominated areas, and an audit trail provides a record of who disarmed the building, or room, and when
- The Facility Services Section publishes 'Guidelines for Intrusion Alarm Systems' which outlines alarm systems generally, and fully sets out the standards for equipment and reporting.

8.4 Computer Theft Protection

8.4.1 Theft Mechanisms

Theft or tampering with computer mice seems to be almost unavoidable, and some loss of such lower value 'plug-in' items will probably be inevitable due to lack of preventative measures.

The two more serious theft mechanisms which have been reported in the past are:

- People posing as computer technicians, or similar, simply walking away unchallenged with computers under the pretext of maintenance.
- Computer cases opened and memory, CPU's, entire mother boards, daughter boards and disk drives removed, leaving empty or 'gutted' outside cases.

The incidence of such problems is greater in unsupervised computer resource areas often found in secondary colleges and universities.

8.4.2 Prevention or Deterrent Measures

Adopt a visitor protocol where all visitors must make an appointment before calling, and must always 'check-in' and 'check-out' at the main office. Record all details of the visit in a

log-book, including booking-in and booking-out of equipment, and the authorising officer. Appropriate identification must be provided, and checks should be made where doubt exists about a visitor's bona fides.

Where practical, secure the computer room at all times when not officially in use. This may be by a lock or by 'sealing' with the security alarm system - preferably both.

Where unsupervised use is a practice, install video camera (CCTV) surveillance with time-lapse recording, and include automatic room illumination on entry after-hours.

Special computer security products are available to lock computers and monitors to desks, and/or prevent the case from being opened.

Permanently engrave the school name and asset number in large, clear letters in front of the equipment, backed up by a comprehensive and accurate asset register. This must be in accordance with the conditions of any lease arrangement which may be in place. Indelible marking systems are commercially available.

CCTV surveillance products generally cost $2,500 to $4,000 per camera, including time-lapse recording equipment, the cost increasing with distance of the cameras to the monitoring location.

8.4.3 Theft Prevention Products

Products aimed at securing computers from removal from desks, or removal of their covers are illustrated and sources detailed below.

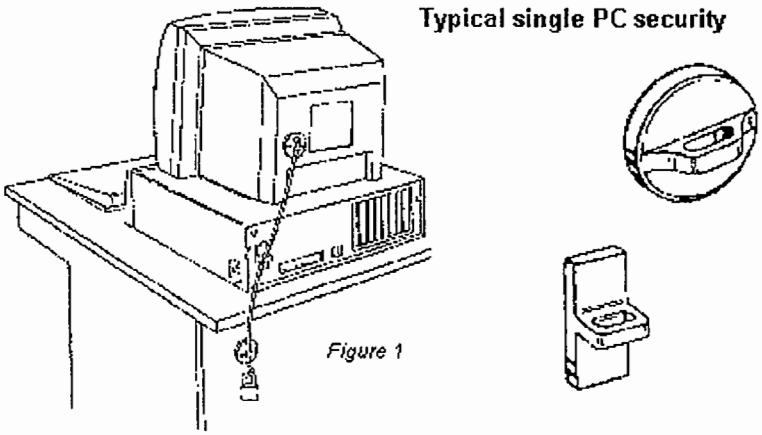

Cable clamp for mouse, keyboard, monitor

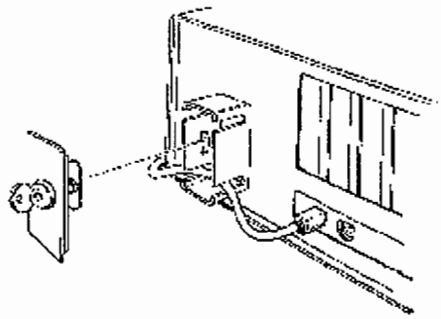

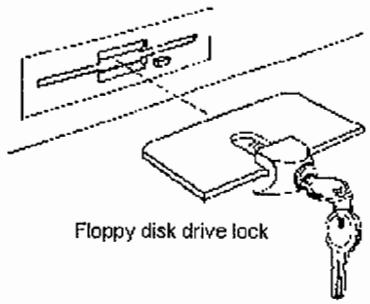

Floppy disk drive lock

PRODUCT	DESCRIPTION	SUPPLIER	PRICE per PC (excludes installation)
Qualtec Universal Superbond Kits	Kit includes 4 plates for bonding to hardware and desk, bonding glue, 1,500mm long x 8mm thick steel braided cable and padlock with keys.	Esselte Australia Pty Ltd Locked Bag 47 Wetherill Park, NSW 2164 Ph 02 9616 7099 Fax 02 9604 7752	$57.00
Steel-Lok & Monitor cabling Kits	Kit includes 2 pairs of metal encasements for fixing to furniture, 8 rubber bonding feet, 2x3 gram bottles adhesive, 2 pairs keys, plates padlock and cable for securing key pad.	Esselte Australia	$87.00
Floppy Disk & CD Rom Drive Security Devices	Prevents unauthorised use of laptop, notebook and desktop PC's		$17.00-$28.00

Security enquiries: Colleen.Rakowski@central.tased.edu.au

Table of Contents

[Home] [Contents] [1. Introduction] [2. Learning Technologies Planning Team] [3. Arranging Computers in Classrooms]
[4. Desirable Classroom Architecture] [5. Furniture for Computer Requirements] [6. Electrical Issues] [7. Lighting]
[**8. Security Generally**] [9. Telephone System] [10. Purchasing Considerations] [11. Resource Schools: Case Studies]
[12. Acknowledgements]

education
home

This page has been produced by the Facility Services Section.
Its content has been authorised by Richard Davoren, Manager (Facility Services).
Questions concerning its content may be directed by email to Richard.Davoren@central.tased.edu.au
This page was last modified on 25 October 2000.
The URL for this page is http://www.doe.tased.edu.au/facnet/guidelines/learningtech/direcfs8.htm
You are directed to a disclaimer and copyright notice governing the information provided.

Facility Services Section
Department of Education

Facility Guidelines for Learning Technologies

9. TELEPHONE SYSTEM

9.1 Issues

The Government policy envisages a telephone based support model whereby teachers or system administrators experiencing software problems will be able to call a 1800 number for assistance.

At the school level there may be an escalation procedure where the school system administrator is called first, and then the help line is the problem still can't be resolved. It is unlikely that the system administrator will be familiar with every software application in use in the school, so telephone access by teachers to curriculum application specific help will become necessary.

Usually help service will require the respective application to be running on the affected computer as telephone discussion takes place, with a loud speaking hands-free phone offering freedom to type commands and use a mouse.

9.2 Phone System Expansion

9.2.1 Density

Ideally there would be one telephone provided in each classroom, and one telephone per group of adjacent or opposite desks in staff rooms. Whilst this may be totally unachievable in the short to medium term, long term planning for cabling and purchase of new telephone systems should be compatible with such a level of penetration.

Extra cabling for computer support telephones should be provided under the policy's infrastructure cabling works, along with data backbones, ISDN cabling and voice/data outlets.

As the phones in classrooms may be infrequently used, and mainly for calls of a non-private nature, it may be quite acceptable to provide three or four classroom phones in parallel working off a single extension.

9.2.2 Cost

Expansion of school phone system equipment including central switching equipment (PABX, keyphone system or TASINET), and extra telephone handsets, will be funded and

61 BEST COPY AVAILABLE

managed by the respective schools.

The cost of telephone systems is not directly proportional to the number of connected handsets, but a reasonable budget estimate (exclusive of outlet cabling) is $500 per equipped extension (ie handset with its own extension number). Systems can also be purchased on a lease finance basis.

The use of TASINET (where service available) tends to substitute handset rental recurrent cost for capital cost, and over a five year study period is likely to be cost neutral.

9.2.3 Extension Types

Most phone systems will only permit the connection of more than one telephone handset in a parallel arrangement to analogue 2-wire extensions.

Keyphone system analogue 2-wire extension ports imitate the phone lines provided by Telstra. They allow all telephone types and accessories sold for domestic purposes to be used on the system, including faxes, modems, answering machines, loud speaking phones and cordless phones.

For flexibility it is recommended that all telephone handsets in locations not requiring advanced intercom and secretarial facilities (such as Principal or Receptionist) be ordinary 2-wire analogue phones, and that any phone system purchased be specified and configured to meet this philosophy.

9.2.4 Controlling Phone Abuse

The presence of many phone handsets need not lead to unrestricted escalation of the phone bill.

The best way of permitting unrestricted access to free help services and other legitimate external calls, whilst restricting or barring other outside calls, is to have the phone system installer program all help desk and other authorised support numbers into "system speed dial memory". These numbers over-ride access barring, but can only be programmed by the installer using a special computer program and notebook plugged into the phone system central equipment.

System speed dial numbers are accessed by dialling a two digit code from any handset, and should be listed on the internal phone directory.

Enquiries: Colleen.Rakowski@central.tased.edu.au
Table of Contents

[Home] [Contents] [1. Introduction] [2. Learning Technologies Planning Team] [3. Arranging Computers in Classrooms]
[4. Desirable Classroom Architecture] [5. Furniture for Computer Requirements] [6. Electrical Issues] [7. Lighting]
[8. Security Generally] [9. Telephone System] [10. Purchasing Considerations] [11. Resource Schools: Case Studies]
[12. Acknowledgements]

education
home

This page has been produced by the Facility Services Section.
Its content has been authorised by Richard Davoren, Manager (Facility Services).
Questions concerning its content may be directed by email to Richard.Davoren@central.tased.edu.au
This page was last modified on 25 October 2000.
The URL for this page is http://www.doe.tased.edu.au/facnet/guidelines/learningtech/direcfs9.htm
You are directed to a disclaimer and copyright notice governing the information provided.

Facility Services Section
Department of Education

Facility Guidelines for Learning Technologies

10. PURCHASING CONSIDERATIONS

10.1 Equipment and Furniture Purchases

10.1.1 General

This guideline suggests contacts for procurement of recommended items and services, and in some cases only a single supplier is known.

Where possible State Purchasing and Sales (SPS) contract items have been identified allowing purchases to be made from period contracts without the need to obtain multiple quotations.

Individual and current quotations should be obtained by schools directly from suppliers, in line with procedures in the Department of Education's *School Management Handbook*.

10.1.2 Government Policy

It is Government policy that, wherever possible, all equipment and services should be obtained from contractors who are holders of current State Purchasing and Sales contracts. This is not affected by the privatisation status of SPS.

Treasurer's Instruction 902(6) states:-

> "Where SPS has established Government contracts for the supply of common-use goods and services, agencies are required to use these contracts unless otherwise authorised by the Secretary, Department of Treasury and Finance."

Enquiries regarding SPS contracts can be directed to:-

Michael Males Ph 03 6233 2722

Mandi Fyfe Ph 03 6233 2659

10.2 Building Works Execution Considerations

10.2.1 Responsibilities

When considering the execution of works associated with the introduction of computers into schools under the Government's policy, the following responsibilities and expenditure limits apply, as detailed in the Department of Education's *School Management Handbook*

C4 BEST COPY AVAILABLE

Section 221.

If in doubt, schools should contact Central Office for clarification.

10.2.2 School Responsibilities

Responsibilities of schools include:

- **Arranging and funding** capital works on the assets for which they are responsible up to a project cost of **$20,000**. In circumstances where a school cannot pay for necessary work at a value below $20,000, the work may be considered for the District priority list.
- **Maintenance and replacement** of all equipment.
- **Damage or loss** involving buildings up to $20,000 per event.
- **Damage, loss or theft** of equipment up to $5,000 per event.
- **Ensuring compliance** with statutory requirements (ie building and local government regulations) before school-initiated building work is commenced.
- **Employment of suitably qualified contractors** for any school-initiated works.
- **Compliance with the Taxation Office** requirements under the Prescribed Payments System and reporting of payments made on school-initiated projects valued at $10,000 or more. (It is likely that the tax obligation of persons engaged on the project will have to be deducted and forwarded to the Taxation Office.)
- **Upgrading of asset registers** and maintenance registers following the acquisition by the school of any new computers, related equipment and software.
- **Updating of the Facility Services departmental building asset register** kept by the custodian on the basement level of Highfield House, Hobart.

10.2.3 District Responsibilities

District responsibilities include:

- **Prioritising works** costing more than $20,000.
- **Liaison with Central Office** staff and principals in the allocation of funding for joint projects in excess of $20,000.

10.2.4 Central Office Responsibilities

Central office responsibilities include:

- **Major damage rectification** costing more than $20,000 in respect of buildings and $5,000 in respect of equipment. It should be noted that costs are calculated at repair, replacement or reinstatement cost of buildings and the current depreciated or market value (not the "replacement" value) of equipment and stock lost or damaged.
- **Provision of advice and assistance** on any procedural matters.

Table of Contents

Enquiries: Brian.H.Smith@central.tased.edu.au

[Home] [Contents] [1. Introduction] [2. Learning Technologies Planning Team] [3. Arranging Computers in Classrooms]
[4. Desirable Classroom Architecture] [5. Furniture for Computer Requirements] [6. Electrical Issues] [7. Lighting]
[8. Security Generally] [9. Telephone System] [10. Purchasing Considerations] [11. Resource Schools: Case Studies]
[12. Acknowledgements]

education home

This page has been produced by the Facility Services Section.
Its content has been authorised by Richard Davoren, Manager (Facility Services).
Questions concerning its content may be directed by email to Richard.Davoren@central.tased.edu.au
This page was last modified on 27 October 2000.
The URL for this page is http://www.doe.tased.edu.au/facnet/guidelines/learningtech/direcf10.htm
You are directed to a disclaimer and copyright notice governing the information provided.

C6

Facility Services Section
Department of Education

Facility Guidelines for Learning Technologies

11. RESOURCE SCHOOLS - CASE STUDIES

11.1 Introduction

During the development of this document, resource teachers at the six primary "Resource" schools were interviewed to obtain opinion on specific problems encountered by these schools in setting up their model classrooms, bearing in mind that the facilities were established prior to the availability of Government funds.

A variety of points were raised which have been summarised in order of importance to each individual school.

The approaches adopted in some cases are contrary to the recommendations of this Guideline and should not be copied without reference to the relevant considerations covered in this guide.

11.2 Primary School "A"

11.2.1 Arrangement

Classrooms are standard sizes (approx 7.2 metres square) and therefore space is at a premium throughout the school.

The trial installation viewed had the computers grouped in the rear (external) corner of the classroom on two fixed-height benches, each approximately 2m long x 750mm deep x 700mm high, specially made for the school. The students sat back to back.

Glare control is by way of a moveable screen - which also serves to shield the computer area from the other student desks - and roller blinds to the external windows.

Although the installation appeared very cramped, it reportedly works for the class and provides the teacher with the essential supervision he considers is very important. A roster for computer use by students had been prepared and advice was that it was functioning well.

11.2.2 Concerns

- **Seating** - ergonomic seating a must to provide flexibility for different sized students.
- **Supervision of students** while they are on the computers.

BEST COPY AVAILABLE

- **Noise** - individual earphones are to be trialled.
- **Space in the classrooms** - in some classrooms it may be necessary to split up the computers or locate them in areas that will limit the supervision factor.
- **Budget** - very limited.
- **Security** - general security was considered a minor concern. There was no lock on the classroom door to the passage. Control of software will be the responsibility of the librarian who will catalogue and treat the individual software packages similar to normal library practices.

Trial Classroom Setup - School "A"

11.3 Primary School "B"

11.3.1 Arrangement

This is an older school with classrooms of a standard size and model, with bag storage behind a screen wall centrally located at the front of the classroom.

The school, at the date of viewing, had not yet received their allocation of PC's, but had several Macintosh computers on loan so that they could trial the installation.

The issues raised by the school were all considered very important.

Standard Classroom - School "B"

11.3.2 Concerns

- Budget - every part of the future installation of computers under the Government's policy will impact heavily on the school's budget allocation.
- Space - very limited. Parts of the walls at the front of the classrooms partitioning off the bag storage areas will need to be demolished to make way for the new computers. This is not considered ideal as the areas are out of direct sight of the teachers and visual supervision will be limited. It may be an option to eliminate existing sinks where they are not considered necessary.
- Security - existing security alarm system will need to be upgraded to cover the classrooms.
- Desks and seating - ergonomic furniture is considered very important. Because of limited availability of funding, the school is currently making do with basic fixed-height desks purpose-made to accommodate two computers (these are now considered too small) and cushions on existing polypropylene seats.
- Storage - resource materials are being stored centrally in the library. It is intended that this practice will continue and be upgraded.

11.4 Primary School "C"

11.4.1 Arrangement

The school currently has the use of Macintosh computers which are on loan until their allocation of PC's is delivered.

The trial classroom is not lacking in space, and to suit the school's current teaching

philosophy, the computers have been positioned in different strategic locations:

- 3 computers in a carpeted quiet area off the main classroom area on a purpose-built fixed-height bench;
- 1 computer on a mobile trolley which can be relocated to any area of the classroom as required; and
- 1 computer on a fixed-height standard school desk adjacent to a telephone point that will provide access to the Internet.

There is one printer located adjacent the Internet computer, and printing jobs are transported via floppy disk to the printer.

11.4.2 Concerns

- Security - a very big concern for this school as it is subject to regular instances of break-ins and theft.
- Budget - very limited and it is considered that to even undertake the minimum necessary works, it will be severely eroded.
- Ergonomic furniture - considered essential to minimise OH & S issues.
- Staff training - adequate training needs to be given to teachers.
- Storage - in classrooms as well as central.

11.5 Primary School "D"

11.5.1 Arrangement

The school is well advanced in planning for the introduction of computers, and is working closely with Educational Computing Professional Development staff to ensure all critical issues are covered as much as possible.

The school has taken delivery of three computers to date, with another two expected shortly.

The computers are set up along one wall of the classroom on fixed-height tables that were made specifically for the installation. These are 800mm square x 700mm high, and they have proved to be too small - the monitor screens are hard up to the rear of the keyboards.

Ergonomic chairs of varying styles have been acquired from a used furniture outlet and, although they required minor repairs, they are very useful. The computers are plugged into the closest existing GPO's, with no surge protection devices in place.

There are no storage facilities for software items - discs and other items are loose on desks at all times.

Noise while the computers are in use was a concern - individual headphones were considered essential and have been acquired.

11.5.2 Concerns

- Security - the school had no security alarms in place in any areas. Also need to provide security provisions for individual computers.

- Budget - very limited.
- Space - suitable areas for locating the future computers are remote from the main teaching areas - this has given rise to concerns about supervision.
- Furniture - considered important to get correct sized tables that will allow sufficient working space for students. Also, it is considered essential to get ergonomic chairs to cater for the different student sizes.
- Glare control - this will be an issue in some classrooms as there are no window furnishings in place. Costs of providing these again will diminish the available budget.
- Storage - it is being addressed in the planning. Main storage will be housed in the school's library area.

11.6 Primary School "E"

11.6.1 Arrangement

Flexibility in the use of computers in teaching in the school is considered very important. Although it is intended to group approximately two thirds of the computers in each classroom, the remainder will be housed on mobile trolleys to allow for maximum flexibility.

The fixed-height tables the school was advised to get to house the new computers are far too small - 690mm square - and leave no space for student use after the computers were put on them.

Generally, space in the classrooms (other than in 4 Terrapin classrooms) is not a problem as they are generously sized. Even so, the school is hoping to incorporate adjacent quiet areas into the main teaching areas by removing the existing walls. This will hinge around funding availability as the walls appear to be load bearing block walls.

11.6.2 Concerns

- Budget - very limited amount of funding available to cater for all the issues.
- Flexibility - the school considers this a very important issue. Therefore it considers it essential that there be sufficient GPO's and other necessary outlets in all the classrooms to provide as much flexibility in the use of the new computers as possible.
- Furniture provision - readily available advice to schools in the types of furniture that is available and what ought to be acquired. Ergonomic seating is considered essential.
- Training and support - available funding will not allow for highly qualified and expensive professionals to train staff. It is hoped that trainees from Elizabeth College and the like will be available to groups of schools so that the costs (hopefully reasonable) can be shared.
- Security - extensions to the existing security systems have already had a marked effect on the school's budget. It is feared that the provision of further computers will again exacerbate the situation.
- Heat Control in the Terrapin classrooms - these are subject to direct sun for the whole morning. At present the only possible form of relief is gained by opening the doors - this is very unsuitable and may cause a dust problem when the computers are introduced.

11.7 Primary School "F"

11.7.1 Arrangement

Although this is an older school, all the classrooms throughout the school, except one, are double rooms. This was achieved some time ago by removing the dividing walls. Hence space is not an issue here.

Space for the new computers in the single-roomed classroom will be created by the removal of a wall (eliminating an existing Store Room) thereby enlarging an existing alcove.

The school is fortunate to have a capable maintenance carpenter on staff, so costs associated with provision of infrastructure requirements - building works, benches and cabling associated with the computers - have been kept to a minimum.

As the school has had the experience of operating a computer laboratory for some time and it suits their teaching style, it is planned to group the computers in all the classrooms in one corner - flexibility is not considered necessary.

The benches accommodating the computers in the trial classroom have been installed at a height of 790mm above the floor. The students are currently using very low student seats which are unsuitable. It is planned to acquire ergonomic seating similar to that in use in the Computer Laboratory.

11.7.2 Concerns

- Noise - individual headphones are essential.
- Budget - limited funds available.
- Ergonomic seating - considered essential.
- Space - there must be adequate space available around each computer for up to three students at a time.
- Security - some extensions to the security system may be considered as currently there are detectors in the corridors only. The windows behind the new computer installations between the classrooms and the corridors will need to be blanked off. Curtains are installed on all external windows. Individual computers need to be secured in a suitable way to deter theft.
- Cable Management - as the computers are to be in full view at all times, cables should be catered for so that the installations are not unsightly.
- Storage - some secure storage ought to be provided in each classroom. Major storage of software and related matter will be in the central store adjacent to the existing Computer Laboratory.

Trial Set-up diagram - School "F"

Table of Contents

Enquiries: Les.Burbury@central.tased.edu.au

[Home] [Contents] [1. Introduction] [2. Learning Technologies Planning Team] [3. Arranging Computers in Classrooms]
[4. Desirable Classroom Architecture] [5. Furniture for Computer Requirements] [6. Electrical Issues] [7. Lighting]
[8. Security Generally] [9. Telephone System] [10. Purchasing Considerations] [11. Resource Schools: Case Studies]
[12. Acknowledgements]

education
home

This page has been produced by the Facility Services Section.
Its content has been authorised by Richard Davoren, Manager (Facility Services).
Questions concerning its content may be directed by email to Richard.Davoren@central.tased.edu.au
This page was last modified on 08 November 2000.
The URL for this page is http://www.doe.tased.edu.au/facnet/guidelines/learningtech/direcf11.htm
You are directed to a disclaimer and copyright notice governing the information provided.

Facility Services Section
Department of Education

Facility Guidelines for Learning Technologies

12. ACKNOWLEDGEMENTS

12.1 Bibliography

The following publications and articles have been considered in the development of this document:

1. Curtis Fawson and D Dean VanUitert
   THE TECHNOLOGY CLASSROOM - Alternatives for Future Planning
2. Dr Thomas E Glass
   SCHOOLS BUILT FOR TECHNOLOGY - The Effects of Technology on Educational Facilities
3. Larry Buchanan, District Technology Co-ordinator, Poudre School District, Fort Collins, Colorado
   PLANNING THE MULTIMEDIA CLASSROOM
4. Edward E Green, Paul F Cook and Lorraine Bolt
   FITTING NEW TECHNOLOGIES INTO EXISTING CLASSROOMS - Case Studies in the Design of Improved Learning Facilities
5. Tweed W Ross and G Kent Stewart
   FACILITY PLANNING FOR TECHNOLOGY IMPLEMENTATION
   (CEFPI's Educational Facility Planner)
6. Collyn Rivers
   TAKING THE ZAP OUT OF COMPUTERS
   (Australian Business, October 19, 1988)
7. Information Management Branch - Help Centre, Department of Education, Hobart
   THE GETTING READY GUIDE - Revision Information Version - July, 1997
8. Sebel Furniture Ltd
   EDUCATION FURNITURE RESEARCH

12.2 Consultant

The consultant for the project was Andrew Boon Pty Ltd. The Department of Education acknowledges the professional manner in which the company has carried out the task and recognises that most of the information contained in the documents was researched specifically for this project. Schools can be confident that this is a reliable and contemporary resource.

BEST COPY AVAILABLE

12.3 Assistance

The assistance of Facility Services and Library Services staff in locating and supplying the above research materials, input from staff at Resource and Lighthouse Schools, and comprehensive feedback on the draft version from the Information Management Branch's computers in schools project officer, Ken Price, was greatly appreciated.

Publication of the Web version was undertaken within the resources of Facility Services.

Here is a useful link to assist school principals prepare for the introduction of learning technologies into schools: Victorian Government "Learning Technologies Planning Guide"

Table of Contents

Enquiries: Les.Burbury@central.tased.edu.au

[Home] [Contents] [1. Introduction] [2. Learning Technologies Planning Team] [3. Arranging Computers in Classrooms] [4. Desirable Classroom Architecture] [5. Furniture for Computer Requirements] [6. Electrical Issues] [7. Lighting] [8. Security Generally] [9. Telephone System] [10. Purchasing Considerations] [11. Resource Schools: Case Studies] [12. Acknowledgements]

education home

This page has been produced by the Facility Services Section.
Its content has been authorised by Richard Davoren, Manager (Facility Services).
Questions concerning its content may be directed by email to Richard.Davoren@central.tased.edu.au
This page was last modified on 27 October 2000.
The URL for this page is http://www.doe.tased.edu.au/facnet/guidelines/learningtech/direcf12.htm
You are directed to a disclaimer and copyright notice governing the information provided.