DOCUMENT RESUME

ED 453 652 EF 005 949

AUTHOR	Wadsworth, Alison
TITLE	Furniture and Equipment in Schools: A Purchasing Guide. Managing School Facilities, Guide 7.
INSTITUTION	Department for Education and Employment, London (England). Architects and Building Branch.
ISBN	ISBN-0-11-271092-1
PUB DATE	2000-00-00
NOTE	103p.; Contributions from Andy Thompson and Chris Bissell.
AVAILABLE FROM	The Stationary Office, P.O. Box 29, St. Crispins House, Duke Street, Norwich NR3 1PD England (13.95 British pounds). Tel: 0870-600-5522; Fax: 0870-600-5533; e-mail: customer.services@theso.uk; Web site: http://www.clicktso.com.
PUB TYPE	Guides - Non-Classroom (055)
EDRS PRICE	MF01/PC05 Plus Postage.
DESCRIPTORS	Elementary Secondary Education; *Equipment; Foreign Countries; *Furniture; *Guidelines; Public Schools; *Purchasing
IDENTIFIERS	Cost Containment; United Kingdom

ABSTRACT

This document offers advice on the processes that should be followed when schools in the United Kingdom buy their furniture and equipment (F&E). Sections 1 and 2 examine the first steps, prior to purchasing, such as curriculum analysis and market exploration; and sections 3 and 4 explore the importance of creating a clear specification for F&E, both to ensure that a school gets what it wants and that it achieves value for the money. The way in which the money can be organized into categories to ensure a balanced budget is also considered, as is the need to take a whole school approach to F&E. Section 5 analyzes the types of suppliers schools may use to purchase F&E and the criteria that should be used to choose the most appropriate route. It also features a flow chart to give schools a clearly set out route for choosing the most appropriate supplier for their situation. Appendices contain detailed F&E issues such as size, quality, and aesthetics; some F&E project case studies; and references to publications and Internet sites where information can be found on highly detailed subjects such as worktop specification. (GR)

Reproductions supplied by EDRS are the best that can be made
from the original document.

ED 453 652

PERMISSION TO REPRODUCE AND DISSEMINATE THIS MATERIAL HAS BEEN GRANTED BY

John Birch

TO THE EDUCATIONAL RESOURCES INFORMATION CENTER (ERIC)

1

D/EE
Department for Education and Employment

Managing school facilities
Guide 7

Furniture and Equipment in Schools:

A Purchasing Guide

Excellence in schools

U.S. DEPARTMENT OF EDUCATION
Office of Educational Research and Improvement
EDUCATIONAL RESOURCES INFORMATION CENTER (ERIC)

☒ This document has been reproduced as received from the person or organization originating it.

☐ Minor changes have been made to improve reproduction quality.

• Points of view or opinions stated in this document do not necessarily represent official OERI position or policy.

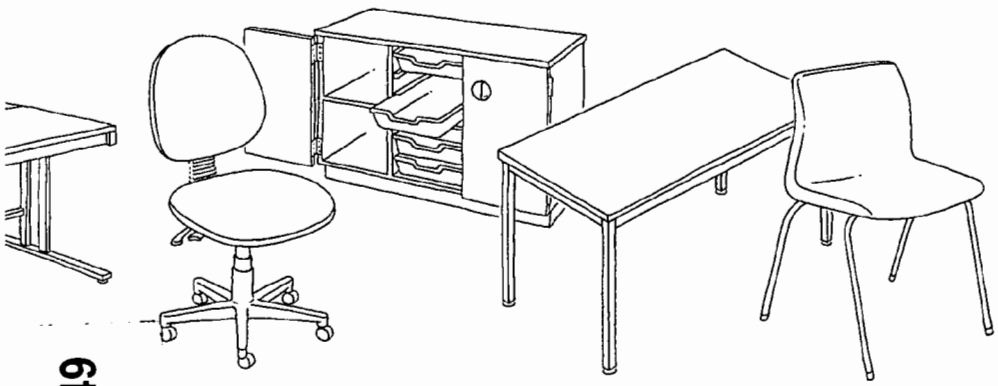

EF 005 949

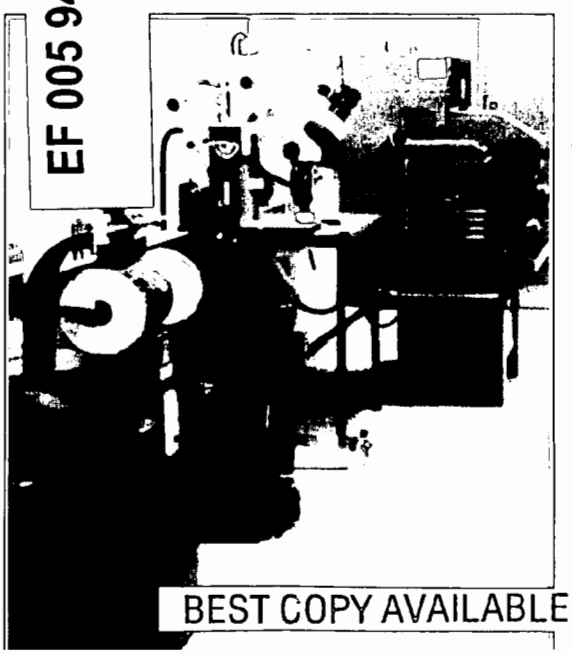

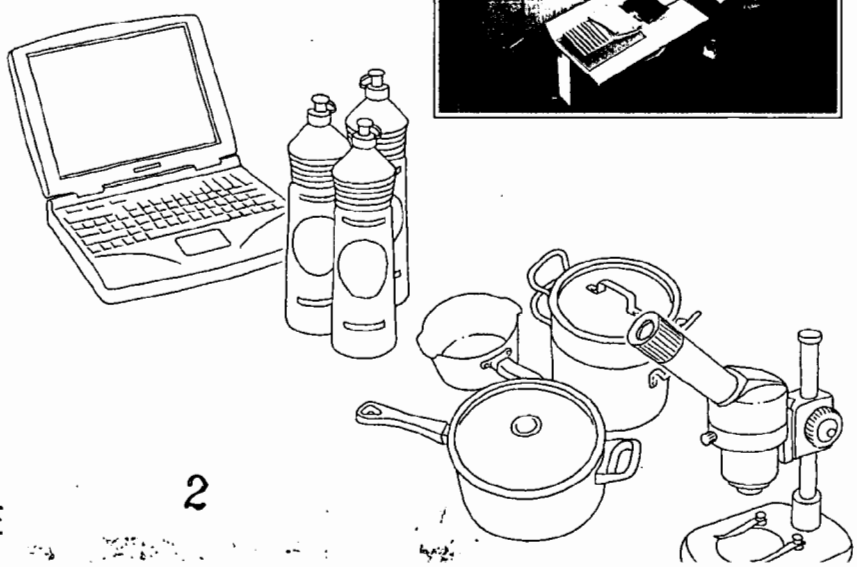

BEST COPY AVAILABLE

Department for
Education and Employment

Furniture and Equipment in Schools: A Purchasing Guide

London

The Stationery Office

3

Published with the permission of DfEE on behalf of the Controller of Her Majesty's Stationery Office.

© Crown Copyright 2000

All rights reserved.

Copyright in the typographical arrangement and design is vested in The Stationery Office Limited.
Applications for reproduction should be made in writing in the first instance to
the Copyright Unit, Her Majesty's Stationery Office, St Clements House, 2–16 Colegate, Norwich NR3 1BQ.

First published 2000

ISBN 0 11 271092 1

CONTENTS

	Introduction	1
	Summary flow chart	2–3
SECTION 1:	IDENTIFYING YOUR NEEDS	4
SECTION 2:	EXPLORING THE MARKET	9
SECTION 3:	SETTING YOUR BUDGET	13
SECTION 4:	PURCHASING	21
SECTION 5:	SUPPLIERS	37
APPENDIX A:	SPECIFICATION ISSUES	48
SECTION A/1:	FURNITURE ITEMS	48
SECTION A/2:	SIZES AND ERGONOMICS	61
SECTION A/3:	QUALITY ISSUES	66
SECTION A/4:	LAYOUT ISSUES	75
SECTION A/5:	AESTHETICS	78
APPENDIX B:	CASE STUDIES	81
CASE STUDY B/1:	PURCHASING F & E FOR A NEW SUITE IN A LARGE SECONDARY SCHOOL.	81
CASE STUDY B/2:	PURCHASING F & E FOR A NEW BUILD SECONDARY SCHOOL.	83
CASE STUDY B/3:	PURCHASING F & E FOR A NEW BUILD PRIMARY SCHOOL.	86
Appendix C:	USEFUL REFERENCES	89
SECTION C/1:	PUBLICATIONS.	89
SECTION C/2:	WEBSITES.	93
	Index	95

ACKNOWLEDGEMENTS

The DfEE would particularly like to thank:
Ros Aird, Head of Purchasing and Supply, Hertfordshire CC and
David Jevons, Managing Director, British Thornton
and also:
Alan Brown of APMG
Marc Davies of CFG
Alex Lattimer of Metalliform
Victoria Musgrave of Blenheim High School
Dominic Savage of BESA
Martin Symonds of Galt Premier
who made up a working group throughout the project.

This publication has been prepared by the following team of DfEE Architects and Building professionals, under the Head of Branch, Mukund Patel:
Author:
Alison Wadsworth, Furniture Designer
with contributions from:
Andy Thompson, Deputy Head of Branch
Chris Bissell, Principal Architect

The following organisations have also been of assistance
Associated Plastics, Morgan and Grundy
Atkinson Vari-Tech
Balmforth Engineering Ltd
British Educational Suppliers
Budget Direct Plc
Central Buying Consortium
Certwood Ltd
Cochranes of Oxford Ltd
Conect Numerical Control ltd
Continental Sports Ltd
Coomber Electronic Equipment Ltd
Counties Furniture Group
Crossbrooks Furniture Ltd
Denford
Devon County Council
Ealing County Council
Eastern Shires Purchasing Organisation
EFM-Chesterfield
EME-Scotland
ESF/British Thornton
Essex County Council
FIRA
GLS Dudley Ltd
Gratnells Ltd
Griffin and George
Heron educational Ltd
HME Technology
HSE
T S Harrison and Sons
Interform Contract Furniture Ltd
MICE Kaymar
Key Stage Educational Systems
Klick
Matthews Educational Furniture
Metalliform
Morleys of Bicester ltd
Nortek
Novara Plc
Papworth Furniture Ltd
Philip Harris
Philip and Tacey
Remploy
Sherwood Industries
SICO Europe Ltd
Stage Systems
The Consortium
TRADA Technology Ltd
Yorkshire Purchasing Organisation

And to the following schools who were most generous with their time:
Ivybridge Community College, Devon
Tabor High School, Essex
Willow Tree Primary, Ealing
and also:
Lyons Hall County Primary School, Essex
Merebrook First School, Bucks
Whitegrove Primary School, Bracknell Forest

INTRODUCTION

The provision of furniture and equipment (F & E) forms a major part of schools' spend – estimated to be up to £973 million per annum[1]. Whether a school is undertaking a large capital project or a simple furniture renewal project, it is important that the money allocated to it is spent wisely.

Under Fair Funding arrangements, schools have increasing responsibility for purchasing F & E. They are free to buy from a bewildering array of manufacturers and service providers, although their Local Education Authority (LEA) will always be available to assist.

This document is aimed at Heads, Governors and Bursars. It offers advice on the processes that should be followed when buying F & E. It is intended that different people will 'dip into' different sections, depending on their interests and the level of detail they require. As the document progresses, the level of detail increases. Thus, Appendix A covers detailed issues such as size, quality and aesthetics, Appendix B gives Headteachers' accounts of their F & E projects and Appendix C gives references to publications and Internet sites where information can be found on highly detailed subjects such as worktop specification.

It is hoped that the guidance will raise awareness of F & E issues and enable schools to set their own priorities and, ultimately, to make their own decisions. This should, in turn, result in schools purchasing suitable, quality products using the most appropriate, accountable method and ensuring value for money. It is not intended to be a comprehensive guide to purchasing – LEAs will be far more able to give relevant advice based on their knowledge of individual schools in their area. However, it is hoped that the document will serve as an introduction to purchasing and raise awareness of this important area of school facilities management.

The main body of the document discusses various aspects of purchasing. Sections 1 and 2 are concerned with the first steps, prior to purchasing, such as curriculum analysis and market exploration. Sections 3 and 4 look at the importance of creating a clear specification for F & E, both to ensure that a school gets what it wants and that it achieves value for money. The way in which the money can be organised into categories to ensure a balanced budget is also considered, as is the need to take a whole school approach to F & E. Section 4 covers in detail the process that should be followed when buying F & E products.

Section 5 analyses the types of suppliers[2] schools may use to purchase F & E and the criteria that should be used to choose the most appropriate route. It features a flow chart which should give schools a clearly set out route for choosing the most appropriate supplier for their situation.

1 Taken from British Educational Suppliers Association's (BESA) 'UK Schools Survey on Budget and Resource Provision' 2000 Edition which includes consumables, furniture, teaching equipment and IT hardware and software.

2 For the purposes of this document the term 'suppliers' refers to all organisations which manufacture and/or sell F & E.

Following the Critical Path for purchasing

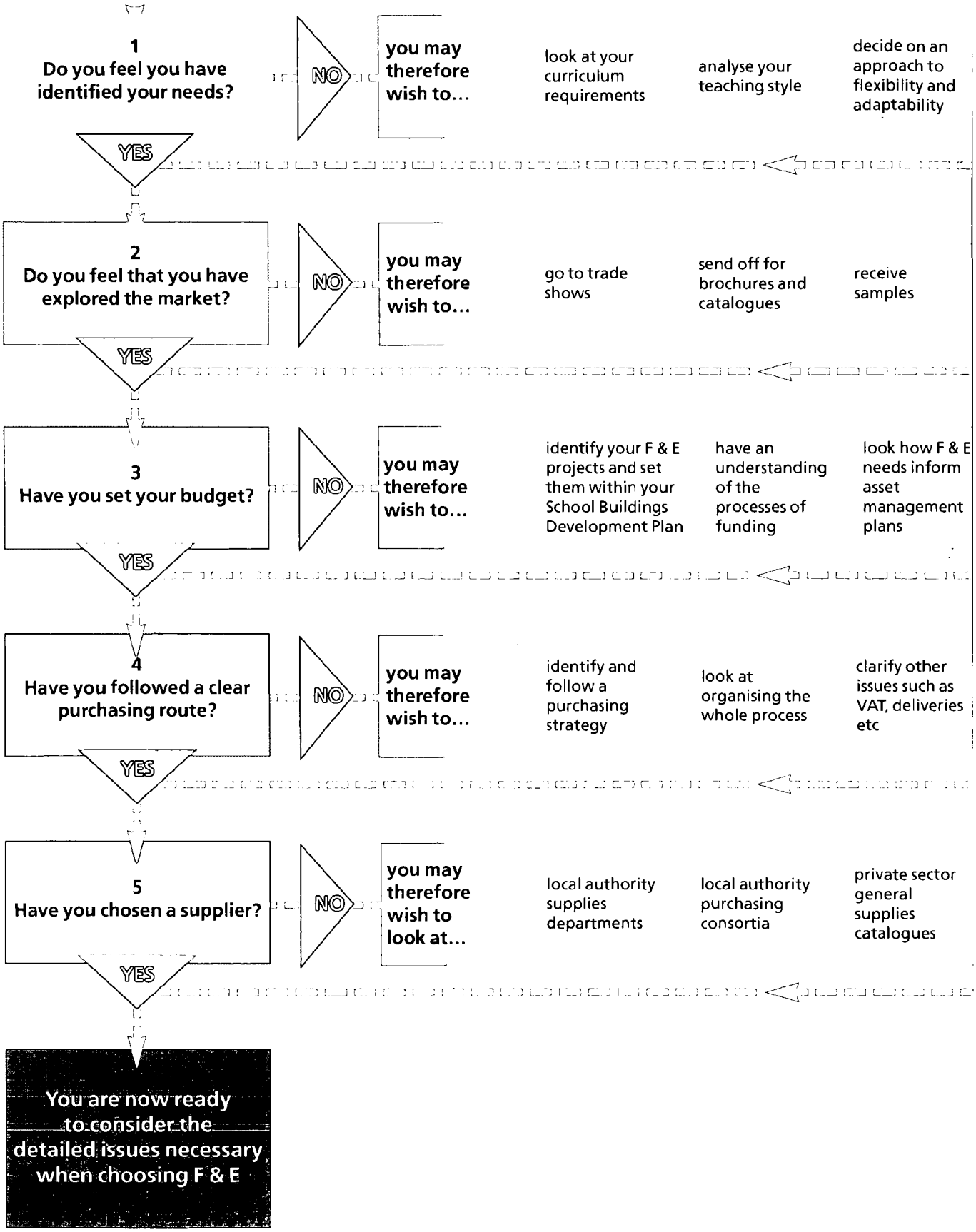

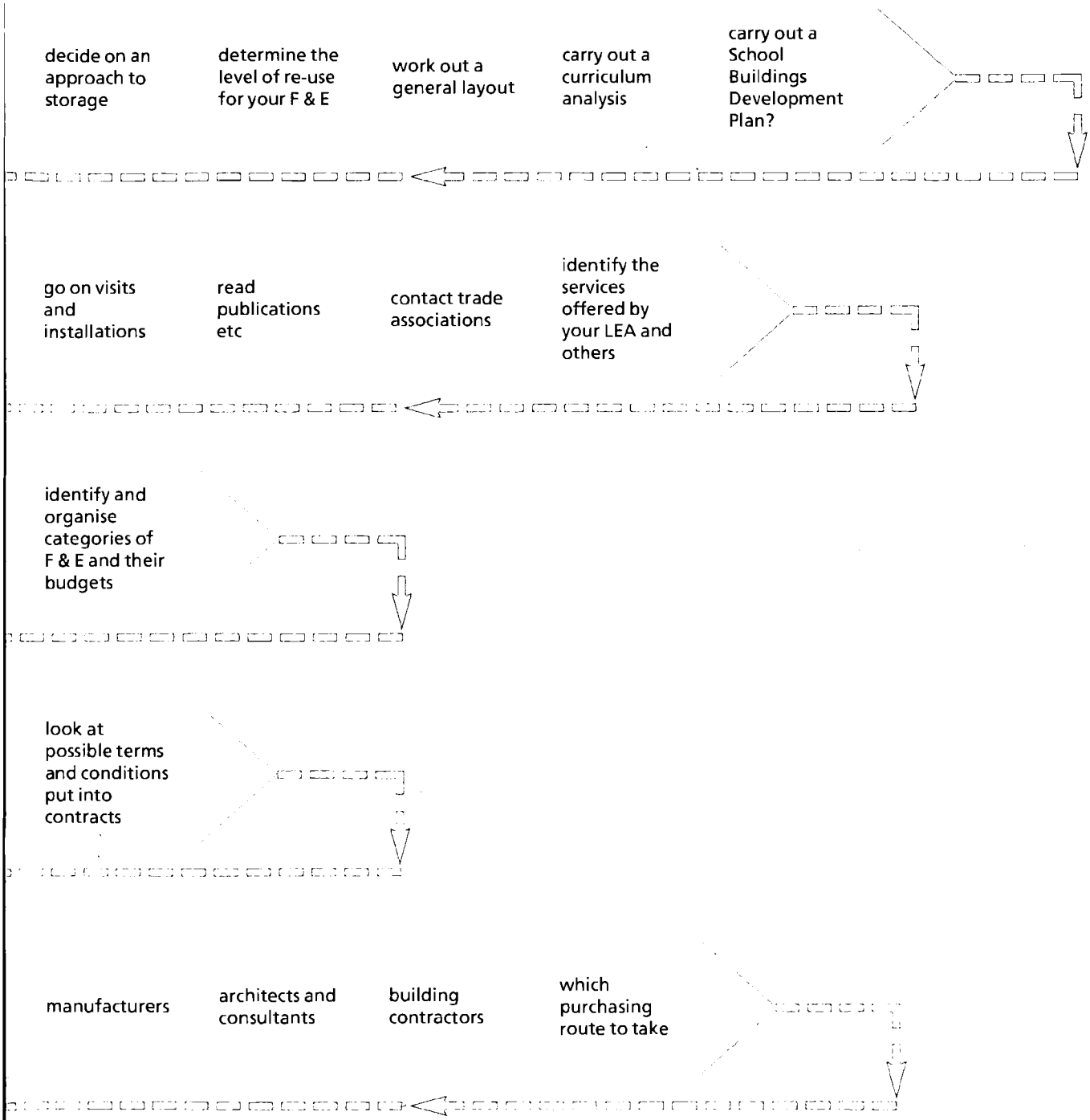
carry out a School Buildings Development Plan?
carry out a curriculum analysis
work out a general layout
determine the level of re-use for your F & E
decide on an approach to storage
identify the services offered by your LEA and others
contact trade associations
read publications etc
go on visits and installations
identify and organise categories of F & E and their budgets
look at possible terms and conditions put into contracts
which purchasing route to take
building contractors
architects and consultants
manufacturers

SECTION 1 IDENTIFYING YOUR NEEDS

This section looks at how to determine your furniture and equipment (F & E) needs based on a study of your school's requirements. The considerations outlined below should ensure that budgets are spent appropriately on F & E which will support the aims and objectives of your school.

Curriculum Requirements

1.1 A study of individual curriculum subjects will identify both the general and specific activities that pupils will need to undertake and the F & E needed for them.

1.2 General activities are those carried out in any subject regardless of specialism. These include activities such as individual note-taking or teacher presentation and will demand certain F & E items such as tables and audio-visual equipment. Specialist activities are more specific to the individual subject. For example, in design and technology you may wish pupils to work with metal in a workshop: a milling machine may therefore be required.

1.3 These considerations will form part of your Educational Development Plan which should be the basis of all projects carried out on the school site (see Section 3, 'F & E as Part of a Whole School Strategy'). In certain areas you may wish to enlist the services of Local Education Authority (LEA) curriculum advisors (see Section 5 'Architects and Consultants').

Teaching Style

1.4 Individual teachers will have their own particular style of teaching. It is impractical to tailor a classroom too closely to that, however your school is likely to have an overall teaching ethos which can form a useful basis for determining F & E provision. For example, you may:

- have an integrated approach to information communication technology (ICT) with at least one computer in every classroom;
- wish to have regular TV and video presentations as part of the teaching process;
- prefer teachers to teach from various parts of the room, using a locker cupboard for personal items instead of a desk.

1.5 All these approaches will affect both the layout of the room (see Section A/4) and the F & E provided.

Approach to Adaptability

1.6 Furniture, and to some extent, equipment, can be adaptable in one of two ways. Firstly, by being lightweight and easily moved around to form a variety of classroom layouts and secondly, by performing a number of functions.

1.7 Multi-functional furniture can often be considered good value for money. In primary schools, one space often houses a number of general and specialist activities. Adaptable furniture which provides a number of facilities is ideal in this situation as it saves valuable space, both in the classroom and in shared areas such as the hall.

1.8 However, some multi-functional furniture can require a significant amount of adjustment from the teacher. Some teachers, already busy with the demands of the curriculum, may not welcome this further call on their time. It is also true that furniture which is too easily adjusted can be prone to mis-use by pupils. Furniture with various adjustable components can also be difficult to repair or replace. Perversely, a simple piece of furniture is often more adaptable.

1.9 In some cases, a 'whole school' approach to furniture may be taken. This means that all classrooms are provided with the same basic F & E items. Teaching spaces are interchangeable and therefore more flexible. For example, if a room used for graphics is changed to become a room used for textiles and half of the F & E in that room is common to both subjects the change-over becomes easier. This approach also gives spaces within suites a coherent feel (see Section A/5, 'Image').

1.10 With careful consideration of F & E provision, adaptable spaces can be created in which all teachers can work comfortably and which they can plan to suit their own way of working (see also paras 1.17–18).

Approach to Storage

1.11 There are several 'whole school' approaches to the organisation of storage which may affect F & E provision. For example, a school may (where appropriate) wish to house classroom resources in:

- a central departmental stockroom; or
- a storeroom off the classroom; or
- storage units based in the classroom.

1.12 Having storage units in the classroom so that they are easily accessed by teachers and pupils will affect both the layout and size of the room. It will also have implications for the amount and type of storage furniture you may wish to buy.

1.13 Compatible storage units, used across the whole school, allow resources to be shared more easily. For example, if units containing one size and shape of tray are used across a department, resources contained within them can be transported between stores and rooms as required (see Section A/1, Fig A/1-7).

Re-use of F & E

1.14 When embarking on a project you or your consultant may wish to assess your existing F & E to see how much can be re-used.

1.15 When considering new furniture it is worth comparing the cost with that of refurbishment – some furniture items are more sympathetic to this than others. You may wish to bring in a consultant to carry out this process for you. Often, savings can be made by re-sanding wooden benches in workshops and laboratories or re-spraying metal under-frames. Quotes can be obtained from manufacturers and local joiners or sprayshops, or the work could be carried out by your in-house maintenance team if you have one. You should, however, check that your school's insurance is still valid when modifications are made to F & E products. A risk assessment must be carried out in advance of any work as machinery which is upgraded is then required to meet the latest regulations – again a consultant could help on this. Safety must always be a primary consideration and F & E must be strong and stable enough to withstand further periods of use.

1.16 It may be worth asking the manufacturers of the school's workshop equipment to overhaul and re-spray their machines. Most workshop machinery has changed little in the last fifty years so an upgrade of existing equipment may well be worthwhile. Several brightly coloured machines in a workshop can do a lot to create a stimulating and pleasant working environment.

Layout Issues

1.17 Once you have considered the issues discussed in this Section it is important to think about the general layout of the room. For example, the way in which the tables and chairs are laid out may be influenced by:

- teaching style;
- the way in which storage is dealt with;
- the kind of general and specialist activities which may take place in the room;
- architectural features such as doors and window positions;
- health and safety issues such as clear circulation for safe working and fire escape routes.

1.18 Section A/4 gives details of the layout process and its implications for the choice of F & E. At this initial stage a rough sketch of the F & E features of the layout will be sufficient to enable you to draw up a list of general items and some appropriate potential suppliers. This will eventually enable you to go on to choose specific items of F & E. Fig 1/1 shows the kind of sketch necessary at this stage.

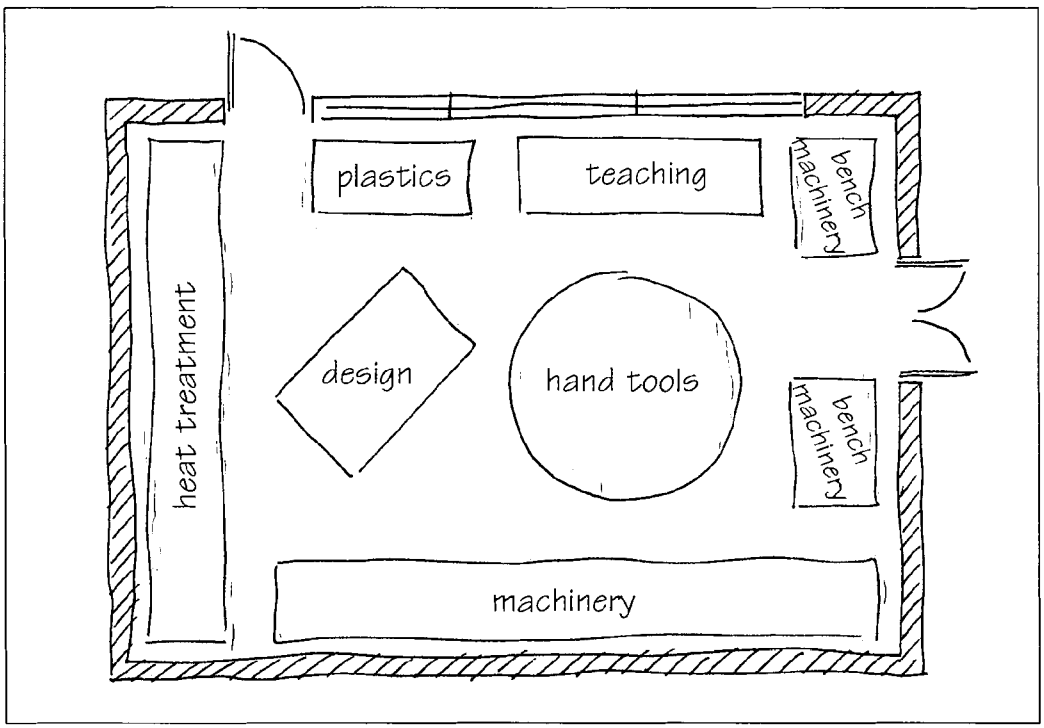

Fig 1/1: Initial sketch of F & E layout.

Calculating the Number of Teaching Spaces you Need

1.19 A curriculum analysis is based on the amount of time spent on each subject as a percentage of the overall timetable. A suggested method of this 'curriculum analysis' is set out in Building Bulletin 82, 'Area Guidelines for Schools', due to be revised in 2001 (see Section C/1). It is particularly useful in new or reorganisation projects in secondary schools, where it can be based on timetabled teaching time and group size for each subject.

1.20 Primary schools will have a hall, a library and a number of classrooms (or bases) to match the number of classes. However, depending on the organisation of the school, there may be a need for further specialist spaces for food, ICT or music, for example. An analysis of the proportion of time that these activities will take up and the likely average group size can help to identify the number, size and type of specialist teaching spaces required.

1.21 If a curriculum analysis indicates that a number of new classrooms are required, F & E provision will inevitably need to be considered. A curriculum analysis can also indicate the maximum group size for each space, and therefore the size of the space and amount of F & E needed. This will not necessarily be new F & E – re-organisation or re-furbishment of existing stock may be possible, (see also paras 1.14–16). The analysis may also suggest that classrooms should be re-organised or enlarged, which could lead to a re-think of F & E provision.

1.22 Where possible, you should take account of potential future changes in the curriculum, particularly if a long term educational development plan is to be identified. Such changes may have implications for accommodation (see also paras 3.1–5).

F & E and the School Buildings Development Plan

1.23 Considering all the issues listed above will give you a broad idea of the kind of F & E work you require. The project(s) identified should then be incorporated in the School Buildings Development Plan (SBDP). The SBDP covers all work to the school including the renewal of F & E assets. Section 3 looks in detail at how the SBDP works. Although F & E is likely to be one of the last phases of any building project, it is important to consider F & E needs early on so that they can be included in both the design and the project cost plan.

Next Steps

Following the points outlined in this section should enable you to have a general idea of the kind of F & E you need and how it fits into new, existing or refurbished classrooms. Your next step is to look at the kind of F & E available in order to make a list of specific items.

Have you looked at...		As a result...
How many rooms you need (if any)?	Yes, we analysed our curriculum timetable	We know how many rooms we need, if any.
Curriculum requirements?	Yes	We have an idea of the activities which need accommodating.
Teaching style?	Yes	We know the F & E implications of our teaching approach.
Level of flexibility and adaptability?	Yes	We know the level of adaptability of F & E we want in our classrooms.
Storage approach?	Yes	We realise the affect our whole school storage policy has.
Re-use of F & E?	Yes	We have an idea of the level of F & E re-use.
General layout?	Yes, based on our needs (see above)	We have a general idea about how we wish to organise F & E in our classrooms.
How the project can fit into the whole school's development plan?	Yes, we did an SBDP	We recognise the need for new build/refurb/renewal of F & E and will plan this into our SBDP.

Fig 1/2: Summary flow chart – Identifying your needs

EXPLORING THE MARKET

SECTION 2

This section looks at the importance of background research into the educational furniture and equipment (F & E) market. It describes ways of going about such research – looking at manufacturers' products and also at catalogue companies and the products they sell. This should allow you and your colleagues to draw up a comprehensive 'wish list' of F & E based on the needs you have identified (see Section 1), your knowledge of the products available to schools and their associated costs.

Trade Shows

2.1 Trade shows are an invaluable resource when researching the educational F & E market. At present the largest UK based exhibition is the annual 'Education Show'. Exhibitions offer the opportunity to see large numbers of suppliers and products under one roof. You can talk with company representatives about the products being exhibited and about your particular requirements, and arrange further meetings as necessary. If the teachers involved in a project can be allocated time to visit trade shows, this will help to draw up an initial 'wish list' of products which will inform F & E projects within the School Buildings Development Plan (see also para 3.5).

2.2 A trade show also offers the chance to make direct comparisons between similar products and to try them out. Manufacturers should encourage you to try sitting at, or on, the furniture on show or to try out the machinery or equipment. A large information communication technology (ICT) exhibition is also held annually and is an ideal opportunity to try out various software and hardware products. It is also a good way to gauge the quality of advice on offer. With ICT equipment in particular, after-sales support is vital.

2.3 Most major trade shows are advertised in the educational press. It is also worth looking out for smaller specialised exhibitions (e.g the Association of Science Education's annual and regional shows) as they may be more specific to your needs. LEA curriculum advisory associations sometimes organise their own shows. These are well worth visiting for manufacturers' in-depth knowledge of what are often specialist products.

Brochures and Catalogues

2.4 Catalogues usually feature a wide variety of F & E items by a number of different manufacturers. Brochures usually feature a limited range of products made by one manufacturer, although others' products may feature if they are complimentary to the main items (see also para 5.36).

2.5 Brochures and catalogues may be picked up at trade shows/exhibitions or ordered. They are an invaluable resource when drawing up an initial list of F & E needs. As well as giving information on products, brochures or catalogues can give you an indication of the quality and the level of service of the companies themselves. Some manufacturers will make one-off products or slight alterations to their existing products at a school's request. This service should ideally be made clear in the brochure. Prices are usually given in brochures and catalogues, but check the dates on these price lists if they are separate as they can easily become out of date.

2.6 The British Educational Suppliers Association (BESA) has a useful list of companies' addresses on their website (see Section C/2) and a link to the companies' websites, from which brochures can sometimes be downloaded. It may be possible to order products directly from a company's website. Some brochures and catalogues are also available on disc.

2.7 Catalogues should have a clear ordering system and ideally should categorise their products under curriculum headings to make choosing easier. A good catalogue should also give in-house contact

names for queries on different product types. Check with your Local Education Authority (LEA) if it has a supplies department catalogue and if so, does if it offers an advice line service? Section 5 gives a summary of the types of F & E suppliers and the services they offer.

Samples

2.8 If the potential order is of a reasonably large value, you can generally expect a furniture manufacturer or catalogue company to leave a sample product with you for a short period of time in order to test the quality of the product.

2.9 Equipment manufacturers may also offer a trial period but this will depend on the complexity of the product. For products which require a degree of specialist knowledge, check that the manufacturer offers a training programme and at what cost. You should also check guarantees and extended warranty offers on complex products. Alternatively it may be useful for them to give a presentation of the product, particularly if it is a new and innovative one. This allows selected staff and Governors to assess the appropriateness of the product before tendering etc is carried out.

Visits

2.10 It may be useful to visit other schools which have already worked with manufacturers and are currently using their products. A manufacturer should be able to suggest at least two schools that you could visit. Draw up a list of questions in advance and be prepared to see beyond the requirements of the particular school visited. Some manufacturers may also suggest a visit to their factory which could allow a number of products to be seen at one time.

2.11 Both visits and exhibitions will incur expenses, for travel, time and possibly for teacher supply cover. This should be factored into the overall cost of the project (see also para 3.1).

Publications and Other Information

2.12 There are a number of publications giving advice on the kind of products required for different areas of the curriculum. The educational press carry articles on resources and the DfEE produce 'Building Bulletins' which give details of the specific requirements of various curriculum subjects. Section C/1 provides a list of useful publications.

2.13 The Internet also offers a number of useful information sites. Section C/2 provides a list of some of these sites. The 'Web' is constantly changing and being updated and it is worth revisiting these sites regularly for up to date information. Search facilities will uncover various educational resources sites, some of which may be international, where ideas and products may be of interest.

Trade Associations

2.14 Reputable companies usually belong to a relevant trade association so it is useful to ask potential suppliers about this. If the association has a code of practice this should be an assurance that their members produce quality products and offer a good level of service. A trade association also gives you another means of complaint if problems with a supplier have not been dealt with satisfactorily by direct contact. For educational equipment and furniture suppliers the relevant association is British Educational Suppliers Association (BESA). BESA has a Code of Practice to which its members must sign up annually. Their Code and details of their members are available at www.besanet.org.uk. Similarly, building professionals should be members of a relevant trade association. A useful website which lists the appropriate trade associations when you type in the relevant profession is www.taforum.org.uk.

Local Education Authority Arrangements

2.15 Most LEAs have a supplies department which buys products for educational establishments in its area. LEA supplies departments often negotiate discounts which removes the need for you to go out to tender. Alternatively, they may have a link with a supplies Department made up of a number of LEAs. Your LEA may also be able to purchase F & E which is not featured in its catalogue on your behalf or to advise on similar products it deals with. LEAs may also have an approved list of tendered suppliers from which schools can get quotes, the lowest quote usually being the one used. Section 4 explains the various processes necessary to achieve 'best value' including using the services of an LEA. Section 5 looks in detail at the way supplies organisations are set up and the services they offer.

Services Offered by Suppliers

2.16 As an initial step it is worth finding out what services are offered by suppliers (see Section 5). Services which need to be considered include delivery (free or charged for); installation service for fixed F & E; delivering and placing loose F & E; whether one-off products are made on request; guarantees; and after care.

2.17 When you have identified some generic F & E products you wish to use and a range of companies able to supply them, it is a good idea to establish whether each supplier will provide a room layout of their products. This will differ from the layout you may have drawn up when identifying your needs (see also para 1.18), and should be an accurate, scaled plan of the room with the proposed F & E shown. This proposed layout will help to clarify your needs and also, where relevant, to confirm that building solutions are correct (see Section A/4).

2.18 Companies which specialise in fixed furniture systems should ideally offer a layout service. This will prove the appropriateness of the F & E and the expertise of the company itself, and thus help to identify those companies suitable to include in a tender exercise (see also para 5.41). These layouts may be commented on and developed to be used eventually as working drawings by builders, electricians and so on. It is worth checking however, whether these will be done speculatively and free of charge prior to an order being made or whether they will be done only after an order is confirmed (see also para 4.10).

2.19 Manufacturers are undoubtedly best able to prepare layouts of their furniture – it is unusual at this early stage for a third party supplier (e.g a catalogue) to prepare layouts. Further details on the layout services suppliers may offer is given in Section 5. As an initial step, it may be worth ascertaining if a manufacturer of loose F & E would be prepared to do a layout of their items bearing in mind you may then possibly go on to purchase through a catalogue if that proves to be more convenient.

Next Steps

Following the points outlined in this section should mean you now have an idea of the kind of F & E products available to you and how much they cost. This should enable you and your staff to draw up a provisional 'wish list' of the products necessary for the space(s) in your project and to budget accordingly. As the project progresses and you become more aware of F & E issues (sizes, quality, etc.) you will then be able to firm up your list into a clearer specification of products (help on these issues is given in Appendix A).

Have you looked at...		As a result...
Trade shows?	Yes, we found out about them in the educational press	We are aware of the range of suppliers and products.
Brochures and catalogues?	Yes, we got hold of them at trade shows & from the educational press	We have been able to compare different products, prices and ordering systems.
Samples of products?	Yes, having spoken to potential suppliers about our needs	We know the F & E implications of our teaching approach.
Visits to other schools?	Yes, we organised this with potential suppliers	We have seen products 'in situ' and talked to the end users.
Relevant publications?	Yes,using the information listed in Appendix C	We have obtained advise and information on different products.
LEA purchasing arrangements?	Yes, we spoke to them about the services they offer	We are able to assess the advantages of using our LEA or organising our own purchasing.
Trade Associations?	Yes, we looked at www.taforum.org.uk	We are aware which suppliers are members and will choose accordingly.
Level of service offered?	Yes,by reading brochures and catalogues and talking to companies	We have a general idea about who can do what and the services available.

Fig 2/1: Summary flow chart – Exploring the market

SETTING THE BUDGET

SECTION 3

This section looks at the importance of identifying and organising your budget having established a general idea of the project(s) you wish to carry out. Clear management of funds should help to ensure value for money is achieved and spending routes are transparent.

Furniture and Equipment as Part of a Whole School Strategy

3.1 The issues considered in the previous two sections will enable you to develop an idea of the furniture and equipment (F & E) you require. The project(s) identified should then be incorporated into the School Buildings Development Plan (SBDP). The SBDP encompasses the whole site and includes all work, including proposed building projects, standard maintenance and renewal of F & E assets. In a building project, F & E is likely to be the last stage. However it is important to consider F & E needs as early as possible so that they can be properly built into any project cost plan. It is also important to include costs for expenses incurred during a project, such as travel and supply cover for staff visits to exhibitions or to other schools' projects (see also para 2.11).

3.2 In an SBDP, projects will be planned, costed, co-ordinated and programmed to be carried out over a number of years (usually 5 or 10). Looking at all projects across the school in one plan enables a coherent strategy to be developed for the whole site. The rolling plan should be reviewed annually so that it is always relevant and up to date. An SBDP committee may be formed of teaching staff, governors, parents and even pupils to represent a wide range of views and interests.

3.3 The SBDP should incorporate any possible staffing and curriculum changes outlined in your Educational Development Plan (EDP). F & E requirements can be closely linked to the needs identified in the EDP. For example, you may wish to increase your teaching of information communication technology (ICT) and will feature this in your EDP. To achieve this, more ICT equipment and furniture may ultimately need to be incorporated into your SBDP (see also para 1.4).

3.4 Few projects can be carried out in isolation, without affecting other parts of the school. Some staff may feel resentment about others' new resources or the inconvenience of building work but this is less likely if the benefits to the whole school of any work are made clear. The SBDP should do this by emphasising the contribution of an individual project in a single department or suite to the whole school strategy.

3.5 In summary therefore, you may wish to:

- carry out an EDP which will identify some key curriculum and staffing changes;
- identify your F & E needs from the EDP. Part of this process may include preparing some general layout proposals (see also para 1.18). If F & E is part of a large building project a consultant may already have been appointed and can advise on this and subsequent phases;
- develop your SBDP and factor in all the projects you require over a period of years, some of which may be solely or partly F & E purchasing projects. These projects will be given a budgetary allocation based on a 'wish list' of items with associated 'ball-park' figures[1] (if you do not have precise figures, asking other schools or using figures suggested by the DfEE[2] can give a broad estimate);

---

1 Be sure to use up-to-date brochures; those gathered over a number of months may give out of date price lists which, when applied to a number of products can lead to an under-estimate of costs, (see also paras 2.4–7).

2 The DfEE publishes cost information for local education authorities periodically, entitled 'Information on Costs and Performance Data', which may be of assistance, (see Section C/1).

- identify and prioritise the projects most necessary or most sensible to do in the impending financial year and allocate actual funding to them;
- if relevant, identify the F & E features outlined in Section A/1 to draw up a fairly specific list of products. Part of this process may include preparing detailed layout proposals (see Section A/4);
- appoint a supplier(s) or follow a purchasing strategy[3], either of which will include drawing up a clear F & E specification (see also paras 4.12–15).

Processes of Funding[4]

3.6 Generally schools get central or local government funding either from the DfEE via their local education authority (LEA) or from the LEA's own resources. Voluntary Aided (VA) schools receive 85% of their grant direct from the DfEE. Funding is distributed to schools in the form of either:

- a capital grant; or
- revenue (or recurrent) funding.

Capital Funding

3.7 Capital funding does not only cover building works, but also the purchase of significant items of F & E. There may be times when it is difficult to distinguish what expenditure should be categorised as capital and what as revenue. 'Capital' is officially defined as any item which is considered a tangible asset to the school (rather than merely maintaining the facilities) and which does not need replacing within one year. Each LEA may set it's own minimum cost figure for a purchase to be classed as capital. It is wise, therefore, to speak to your own LEA to get their definition. For additional clarity, the definition of capital stated in the Chartered Institute of Public Finance and Accountancy (CIPFA) Code of Practice on Local Authority Accounting in Great Britain: A Statement of Recommended Practice (SORP) should be used.

3.8 There are some anomalies in defining what is spent from which budget: some items of F & E could be replaced with capital funding (for example, the replacement of existing F & E in a classroom which has had some building work is likely to be funded from the building project capital rather than revenue funding); conversely revenue can pay for items within a capital project (see also para 3.27). This can therefore lead to confusion about which type of budget pays for which product[5].

3.9 The CIPFA code of practice states that capital funding should not be used for general maintenance, redecoration, day to day repairs, purchase of books or training materials. It is distinct from any element for routine repairs and maintenance which may be included in delegated Fair Funding budgets. Operating equipment or facilities leases do not qualify as capital and finance leases are classed as borrowing (see also paras 4.39–41). Capital should not be used for the hire of temporary accommodation, unless it is part of a larger project which has a short term requirement to re-house classes.

3.10 LEAs mainly control how capital funding is allocated to schools, prioritising according to need in their areas, but the amount they get is set by Government. Authorities receive permission to borrow money to fund projects, through what are called the Annual Capital Guidelines; have plans for Public Private Partnerships approved (which bring in private sector finance) or receive grants for specific initiatives. Examples of the latter are the 'New Deal for Schools' programme, aimed at improving the condition of school buildings, and the Standards Fund grant for security improvements.

3.11 From April 2000, schools started receiving an allocation of capital funding directly from the Department. How much they get is decided on a formula basis, according to whether they are primary or secondary and on pupil numbers, and they are free to the use the money as they wish so long as it

3 You, as a school, may wish to carry out a tendering exercise or you may wish to employ a private sector consultant or your LEA.

4 Information given in this sub-section provides only context rather than detailed information and reflects the situation for funding in schools at the time of writing. Changes over the next few years are likely to affect the way in which schools are funded and it is advisable to visit the DfEE's website at www.dfee.gov.uk regularly for updates.

5 Speak to your LEA about their definitions as an understanding at local level is important if confusion about your spending routes is to be avoided.

qualifies as capital expenditure. Schools may also apply for lottery funding for projects which will incorporate some community use. Of course many schools are experts at raising funds through their Parent Teacher Associations or links with local businesses and communities.

3.12 Most one-off grants require an LEA to bid for money on a school's behalf. LEAs may be required to draw up a list of schools with a significant need for capital work in order of priority. This arrangement highlights the need for a close working relationship between a school and its LEA. The need for schools to have EDPs and SBDPs (see also paras 3.1–5) is paramount and can help in the implementation of Asset Management Plans (AMPs). AMPs give transparency to LEAs' decisions on priorities and will form the basis of capital allocations in the future (see also paras 3.17–18).

3.13 Some capital grants may be given for projects which do not involve any building work and involve only the purchase of resources – ICT projects are one example. The British Educational Suppliers Association (BESA) found in their survey of resource provision in schools that grants for particular initiatives often instigated expenditure on other resources – for example, ICT grants promote the purchase of new computer furniture.

Revenue Funding

3.14 Revenue funding is concerned with paying for the general running costs of a school. It covers a range of expenditure headings, such as staff salaries, heating, maintenance, minor repairs and the replacement of F & E items. Revenue budgets are largely devolved to schools now, under Fair Funding. Just how much a school receives is largely based on how many pupils it has, but other factors, such as the number of pupils receiving free meals, also come into play.

3.15 Revenue budgets also pay for consumable items. The definition of 'capital' given in paragraph 3.7 suggests that if an item does need replacing within one year it is considered a 'consumable' item (i.e. a product with a short life-span). This can lead to confusion as, for example, an item of glassware in a science lab in one school could last ten years, whereas in another it might need replacing within six months. On the whole, however, the term 'consumable' is reasonably appropriate.

3.16 If you are able to make savings in one pocket, such as energy costs, you are then free to use the money for other purposes, such as purchasing teaching materials – although your LEA must be consulted on your intentions. Savings can also be used to help fund a capital project or to add to it, for example the replacement of old furniture unsuitable to transfer to a new building funded from capital grant.

Asset Management Plans

3.17 LEAs have been asked by the DfEE to prepare AMPs. These plans will give a clearer picture of improvement and maintenance work necessary over the next few years. They will also set priorities for carrying out the works. School Buildings Development Plans (SBDPs) form a very useful input into AMPs as many of the issues which need to be considered are the same.

3.18 AMPs involve assessing a school's capital assets for their condition, their suitability (or fitness for purpose) for the task required and their sufficiency (whether there are enough places and sufficient area for the number on roll). AMPs mainly involve the assessment of the buildings but will also require assessment of fixed items of F & E and ICT cabling, which could form the basis of the projected work for SBDPs. There are no plans at present to include loose items such as ICT hardware or loose furniture in the data requirements of the DfEE or LEA. The procedures set out in the AMP guidance could nevertheless be used by schools to assess these products as part of maintenance projections for SBDPs.

Categories of F & E and Their Budgets

3.19 One of the first stages when working out F & E costs should be to determine the types or categories of F & E, in other words what F & E items fall into which category. Different categories will be covered by different budgets but the definitions of these categories vary considerably between LEAs[6]. Your LEA will be able to give you detailed advice on the category organisation they recognise. In a building

6 In the case of VA schools, account must be taken of the division of responsibilities between governors and the LEA. This issue must be looked at in conjunction with the arrangements currently in place. Further information is given in 'How to Apply for funding in Capital and Repair projects from April 2000' DfEE. See also Appendix C.

project it is important that your architect and building contractor are clear about exactly which items go in which category. Failure to do this could result in products going in more than one category or the omission of certain items altogether. The following is set out as a general guide for prompting discussion.

Items Covered by Capital Funds: Fixed F & E

3.20 **Fixed Furniture:** these are items of furniture which need to be fitted to the fabric of the building, this includes items such as:

- science furniture systems (although the extent to which furniture is fitted varies from system to system);
- fitted benches;
- fitted cupboards;
- sinks;
- whiteboards and display boards.

3.21 Sinks, whiteboards and display boards could be classed as equipment but, given their physical connection to other items of furniture (e.g. a sink and the fitted bench which surrounds it), it is preferable to categorise them together.

3.22 Funding for the fixed furniture would rarely come from anything other than the Capital budget as it would almost certainly form part of a building project. The fixed furniture element therefore will generally form part of the building contract and be handled by the architect or building contractor.

3.23 **Fixed Equipment:** includes any item of equipment which is fixed to the building or 'hardwired' (i.e. cabling to the equipment is rigidly fixed to the fabric of the building). This would include items such as:

- a bandsaw in a workshop; or
- a cooker in a food room.

3.24 This is often the category with the smallest expenditure, even though many fixed items of equipment are expensive. In practise, few items of equipment in schools are fixed as the majority are serviced with a standard plug, are lightweight and therefore 'loose'.

3.25 In a building project the fixed equipment element will generally form part of the building package and be handled by the architect or main contractor. Each equipment manufacturer may wish to fit their own product and managing a number of different fitters on one site may be difficult. Building contractors must be willing and able to co-ordinate this. In a building project, some of the more heavily serviced items of equipment may form part of the mechanical and electrical (M & E) package: it must be clear whether or not this is the case.

3.26 **Possible Additions:** some F & E items may fall into different categories depending on the nature of a particular project, for example, building work or standard replacement of F & E. The most common items are:

- *Sanitary ware*, including items such as WCs, hand-basins and air-dryers. These items are generally only provided in projects which involve some element of building work and are therefore usually contained in either the fitted furniture or fitted equipment category, both of which form part of the building costs. However, they may also be part of another building package, not discussed in this document, which includes items such as door handles etc.;
- *Catering F & E*, which may be either fixed or loose items. It would be unusual for a project to require the purchase of F & E for kitchens but not involve some building work. Therefore they are usually contained in either the fitted furniture or equipment category which forms part of the building costs, even though some items may be loose. Some catering items may occasionally be included in the M & E package of the building costs as it requires a high level of servicing installation, but this is fairly unusual.

Items Covered by Capital or Revenue Funding: Loose F & E

3.27 The following items may form part of a capital project and take funding directly from that pot. However it is just as likely, even in a building project, that funding for these items will come from a school's annual revenue budget.

3.28 **Loose Furniture:** is often the most straightforward category and involves individual items of furniture which are not connected to the fabric of the building. Items include:

- loose cupboards;
- chairs;
- tables.

3.29 This and loose equipment (see below) are often the categories which undergo the most 'trimming'. They are often allocated a budget when everything else has been determined. If expenditure is to be balanced it is a good idea to set a budget for all areas of F & E from the outset.

3.30 **Loose Equipment:** is often the most confusing category as it can be difficult to differentiate between capital items and consumables. Items include:

- all ICT hardware, except networking equipment;
- all audio visual (AV) equipment including TVs, telephones, faxes, overhead projectors etc;
- any item of equipment which, for whatever reason, would not be put away in a cupboard and which may therefore need floor space in the classroom. This could include, for example, a vacuum former in a workshop which, although not 'hardwired', is large and heavy and unlikely to be moved; a large bin in an art room which is lightweight but cumbersome or delicate items which should not be moved such as balances in laboratories. Equipment on trolleys should also be included even though the trolleys may be put in storerooms overnight for security reasons – these items still have a space implication.

3.31 **Loose equipment** can often take up a large part of a budget, particularly if it includes ICT hardware. In F & E-only projects it is worth remembering that ICT will require a high level of servicing. The servicing and networking should be allocated to a separate category (usually M & E) which will be undertaken by engineers contracted by the school or by the company providing the hardware.

3.32 **Small items of loose equipment:** are often too specific to curriculum needs to add to an initial budget allocation for loose equipment. For this reason, it is recommended that a separate list of small equipment is drawn up by teachers involved in the curriculum subject. It would be wise to make a broad assessment of the cost of such equipment at the planning stage as expenditure could be quite high, particularly in specialist subjects. Items may include:

- musical instruments;
- power tools for design and technology;
- bunsen burners;
- books;
- ICT software.

3.33 The list of small equipment can then be passed on to the project manager who can take a school-wide approach to the requirement (see also paras 4.27–32), firm up costs and then pass it on to the SBDP committee for final approval. As with all categories of expenditure, the budget can then be allocated and resources purchased.

Items Covered Only By Revenue Funding

3.34 The following items will be paid for out of the revenue budget as they need renewing regularly. It is worth remembering that a capital project may lead to increased spending in this area, particularly when new classrooms are being created.

3.35 **Consumables:** are generally considered to be non-capital items (see also para 3.15) – resources which have to be renewed regularly, such as paper or pens. They would rarely be taken out of a specific project

budget and would be paid for by the school's annual revenue funding. Beware of confusing these items with small equipment (see also para 3.32) as the boundaries between these two categories are often somewhat blurred.

3.36 **Rented Equipment:** the most obvious example of which is the photocopier. Further information on leasing is given in paras 4.39–41.

Anomalies

3.37 **External F & E:** is a confusing category as items may be fixed or loose. For example, a picnic table may be loose, but a bench cemented in; a climbing frame may be loose to allow it to be put away at night but a swing incorporated into the landscaping. Similarly, external F & E may be part of a capital project or a renewal exercise. Even if it is part of a capital project it may not come out of the capital budget for F & E. If a large number of external F & E items are being purchased they may form part of the external landscaping costs. It is quite likely that a building contractor will be involved in landscaping and should be able to identify a budget to work to. Your LEA should also be able to offer advice on this issue.

Category and Budget Organisation

3.38 It is important that category definitions are clarified at the start of a project. There should be an initial budget for each of the categories outlined in this section[7]. Although there will inevitably be some changes in the allocations, this must always be kept track of. For example, if science laboratory furniture were to change from a fixed system to a loose system the money allocated should be transferred immediately to the corresponding budget. Failure to do this may result in a perceived under-spend in one budget which could lead to the purchase of other, non-budgeted, items. The need for a liaison person or project co-ordinator with an overview of this issue is therefore paramount (see also paras 4.27–32).

3.39 It is very important to allow a percentage add-on for the fixing or placing of furniture at budgeting stage. Some companies will include the fixing of furniture in their prices – others may place their loose furniture in the rooms free of charge. Clarification of the services provided at an early stage will avoid unexpected expenditure and possible delay (see also paras 2.16–19). If F & E is to be positioned and placed by a contractor not involved in the ordering or purchase of the items then it may be wise to get your supplier(s) to clearly label their products and preferably each items' room destination. In a large project it may be necessary for a project co-ordinator to oversee this, the opportunity for confusion here must not be underestimated.

3.40 Research in 1997[8] showed that the percentage breakdown of costs for providing F & E for a new 1000 place secondary school was as follows.

- Fixed Furniture 20%.
- Fixed Equipment 10%.
- Loose Furniture 30%.
- Loose Equipment 40%.

3.41 This did not include small equipment or consumables, but gives some idea of the likely breakdown of a budget. It must be emphasised that if a school is to purchase large amounts of new ICT equipment the number of machines required must be determined early on as this can make a significant difference to the budget.

7 Speak to your LEA about their budget organisation

8 'Information on Costs and Performance Data', DfEE 1997, see Section C/1.

Next Steps

By considering the information outlined in this section you should now be aware of the details needed to set a budget for your proposed project. Awareness of funding sources and organisational options should help you to determine the budget within the context of a number of other projects identified for your school over the next 5 to 10 years. A clearly set budget should help with the smooth running of the project. It will also allow you or others acting on your behalf to go on to the next step of purchasing your F & E. As with the whole document, however, the advice given in this section should be considered supplementary to that given by your LEA who will be better aware of your particular requirements.

Have you looked at...		As a result we are aware of...
Your school building development plan?	Yes, we have identified our F & E projects and set them within our SBDP?	How our F & E only work will slot into our SBDP and how F & E can act as part of building projects.
Asset management plans?	Yes, we worked with our LEA using our EDP as a basis	How SBDP's can work with AMP's to identify necessary projects.
Processes of funding?	Yes, we have also looked at the DFEE website for up-to-date information	Where different allocations of money are coming from and what they are earmarked for.
Categories of F & E?	Yes, we have also checked that it is in accordance with our LEA categories	How and why F & E is separated into categories and more clear about our budgetting allocations.

Fig 3/1: Summary flow chart – **Setting your budget**

PURCHASING

SECTION 4

This section looks at the purchasing process you or your suppliers should follow. It gives advice on managing and co-ordinating the process, and on identifying the terms and conditions to which you and your suppliers should agree. As with other sections, this information is intended only as a general guide – your Local Education Authority (LEA) will be able to give specific advice relevant to your particular situation.

Purchasing Strategy and How To Go About It

4.1 It is important to spend some time identifying your requirements (see Section 1) and understanding the market (see Section 2) before embarking on any major project that involves a significant purchasing element. This will be invaluable in ensuring that the most effective use is made of the money available.

4.2 The main aim of effective purchasing should be to get value for money or 'Best Value'. Best Value is not necessarily about the lowest price, it is about the right price relative to criteria such as quality, expected lifespan, delivery time, warranty, installation, after-sales service, cost of spares, etc. Adopting this approach will ensure you spend whatever money you have available effectively. This is the basic requirement behind the term 'public accountability'. In other words, where public money is concerned there are certain rules that must be followed.

4.3 This document does not set out to explain all the details of the legal framework, it merely aims to summarise some of the more significant points. Advice and guidance on procurement rules within the public sector are readily available from your LEA or from professional purchasing organisations such as the Society of Purchasing Officers in Local Government (SOPO). This advice should ensure that your project complies with all the relevant rules and legislation, and saves you time and resources. Purchasing is a complex activity which requires specialist knowledge and skills. In projects which involve significant spend it may be advisable to use a professional purchasing organisation. The organisations that can offer this service are discussed later in this section and also in detail in Section 5.

Step 1: The ground work

4.4 The first task is to set a timetable around which to plan the project. Where necessary, this timetable should take into account the time it takes to comply with public procurement legislation. Following public procurement procedures will ensure that you cover the legal requirements and any relevant 'standing orders' (see also para 4.16) and, as a result, achieve Best Value. Figure 4.1 (overleaf) sets out the ground work procedures.

4.5 There are two main issues surrounding purchasing in the public sector.

i) All public authorities are required by law to follow formal procedures for the supply of goods and materials and the execution of works. As much of school management is now devolved, these procedures also apply to schools.

ii) There is a legal framework that must be complied with. The most significant aspects are Contract Law, Local Government Acts, Health and Safety legislation and European Procurement Directives (see Section C/1 for further information). The European Procurement Directives, for example, require that any service or supply contract with a value exceeding 200,000 ECU's (currently £144,456 at time of writing) are advertised in the European Journal and tendered in accordance with strict timescales. It is not permissible to break down contracts to avoid the requirements of the directives. However, clarification on this issue must be sought as F & E can sometimes form several distinct and unrelated packages whose value is under the stated amount. Some F & E may of course be included in the building package which carries a higher value threshold.

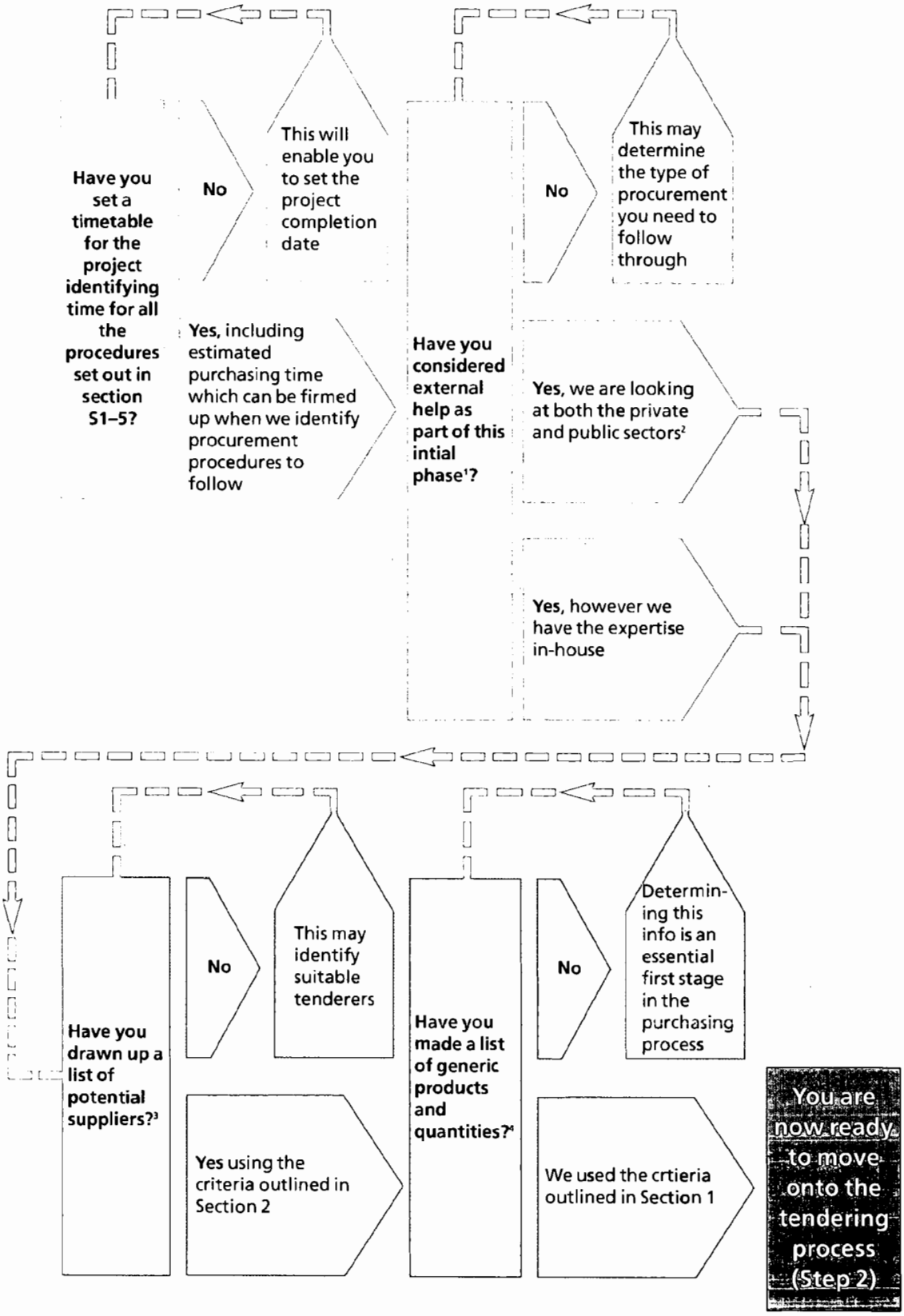

Notes

1 See 4.6 – 7.
2 See 4.7.
3 This may be more easily done when a list of generic F & E is chosen.
4 e.g a need may be identified for a four legged table. In step 2 it will be necessary to identify colour and materials etc to enable a more specific list to be drawn up.

Fig 4/1: Step 1 – The Ground Work

4.6 As an additional measure to ensuring sound financial decisions from school governors themselves, the main School Government Regulations require governing bodies to ask that any governor who has a pecuniary interest in a contract being discussed at a governing body meeting to withdraw and not vote on the matter. The governing body is also required to set up a Register of Business Interests. The register must list, for each member of the governing body and the headteacher, any business interests they or any member of their immediate family have. The register must be kept up to date by notification of changes and through annual review of entries, and be made available for inspection by other governors, staff and parents. The purpose of these requirements is to prevent governors, including heads who are often governors, from any charges of financial impropriety when considering contracts.

4.7 There is a wide variety of organisations (see Section 5 for more detail) from whom information, advice and guidance can be obtained. Their expertise can be invaluable in informing the purchasing process. There are both public and private sector organisations which include, in the public sector:

- DfEE;
- LEAs;
- Local Authority purchasing organisations and consortia;
- SOPO;

and, in the private sector:

- Educational Supply Companies (catalogue companies);
- Furniture Manufacturers;
- Equipment Manufacturers;
- Architects and Educational Consultants.

4.8 In building projects, where private architects and building contractors may be employed, their specialist knowledge of design, construction and fitting out can be drawn upon in planning the purchasing process. As with any supplier, they may not deal solely with educational projects, so you should check their relevant experience in the field before entering into an agreement. It is also advisable to check a potential supplier's financial stability to ensure they can deliver the contract and honour any warranties. Your LEA will often do this as part of the tender procedure, should you choose to use them or will have already done it if they offer a list of pre-tendered suppliers (see also para 4.16). Section 5 looks at the services different suppliers offer.

4.9 When gathering advice about types and quantities of F & E it is important to be aware of the motivation and interests of those providing such advice. You should take this into account when determining the right course for your school. Some schools feel a loyalty to the supplier who approached them at the start of a project and who may have helped them formulate their brief. This loyalty sometimes leads to a reluctance to go out to tender with other companies. In most cases, this goes against the requirement to obtain best value (see also para 4.2).

4.10 Many suppliers will draw up layouts featuring the products they sell. This can be a very useful aid to the planning process and to the choice of suitable tenderers (see also para 2.18 and 5.41). However, be aware that a supplier will not always be impartial – there have been a few instances of schools being given inappropriate specifications or numbers of products when they are led by a supplier. If in doubt, it is always wise to seek advice from your LEA. Carrying out background research in advance will also go some way to avoiding this scenario (see Sections 1 and 2).

4.11 It is very useful to use a variety of sources to research the market, but you should always ensure that you do not give any undertaking that will compromise independence or legality. You, as a school, should never get into a position where you feel obliged to purchase equipment or services whose value you have not checked rigorously.

Step 2 – The Tendering Process

Specification

4.12 Once the project has been identified and the necessary market information gathered, you should spend time working up the final specification for the F & E. This should include decisions on colour, size, standards of manufacture and, depending on the project, room layouts and fitting or installation requirements. The sections in Appendix A give detailed advice on these considerations. Fig 4/2 (overleaf)

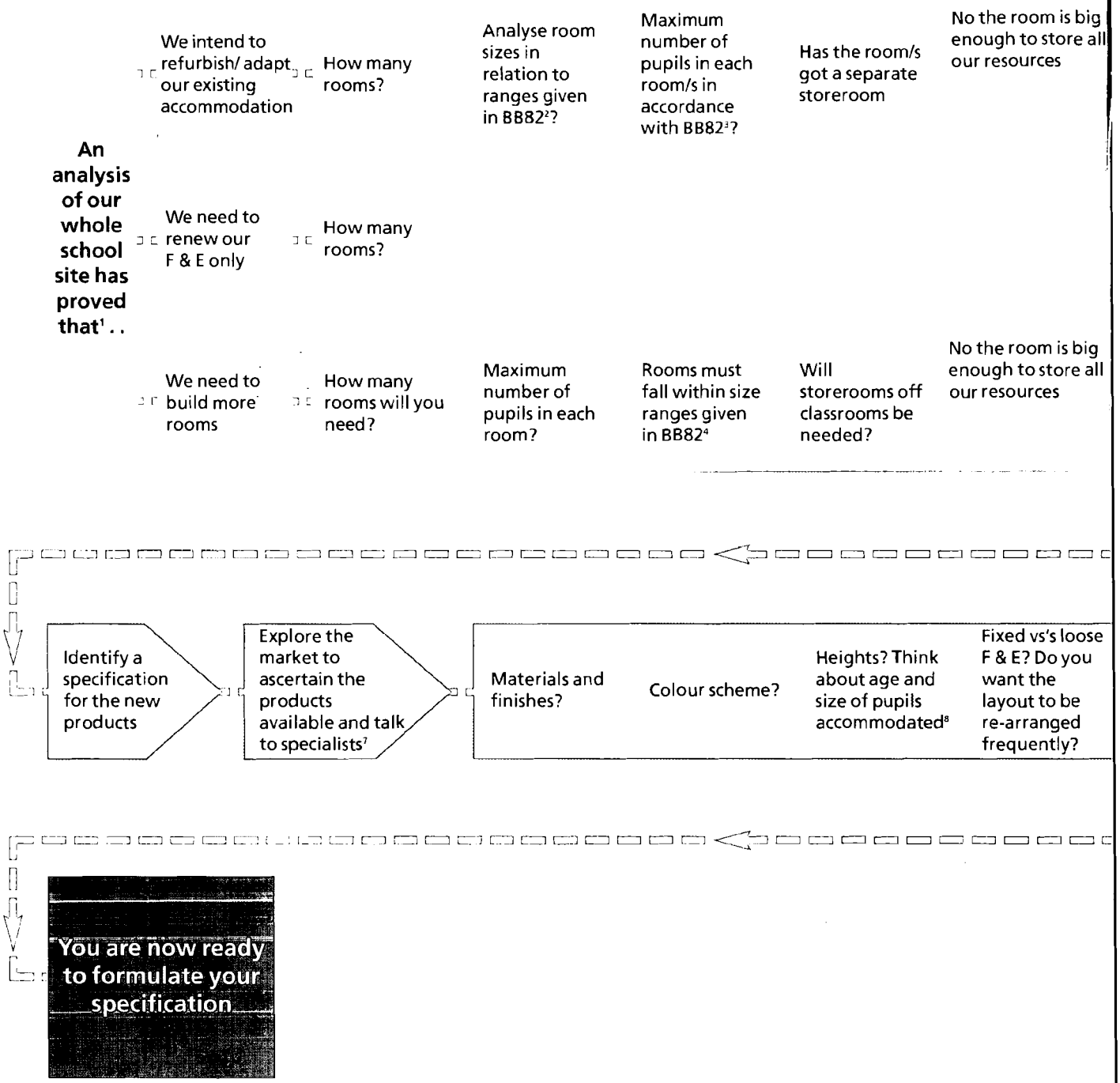

Fig 4/2: Information necessary for a clear F & E specification

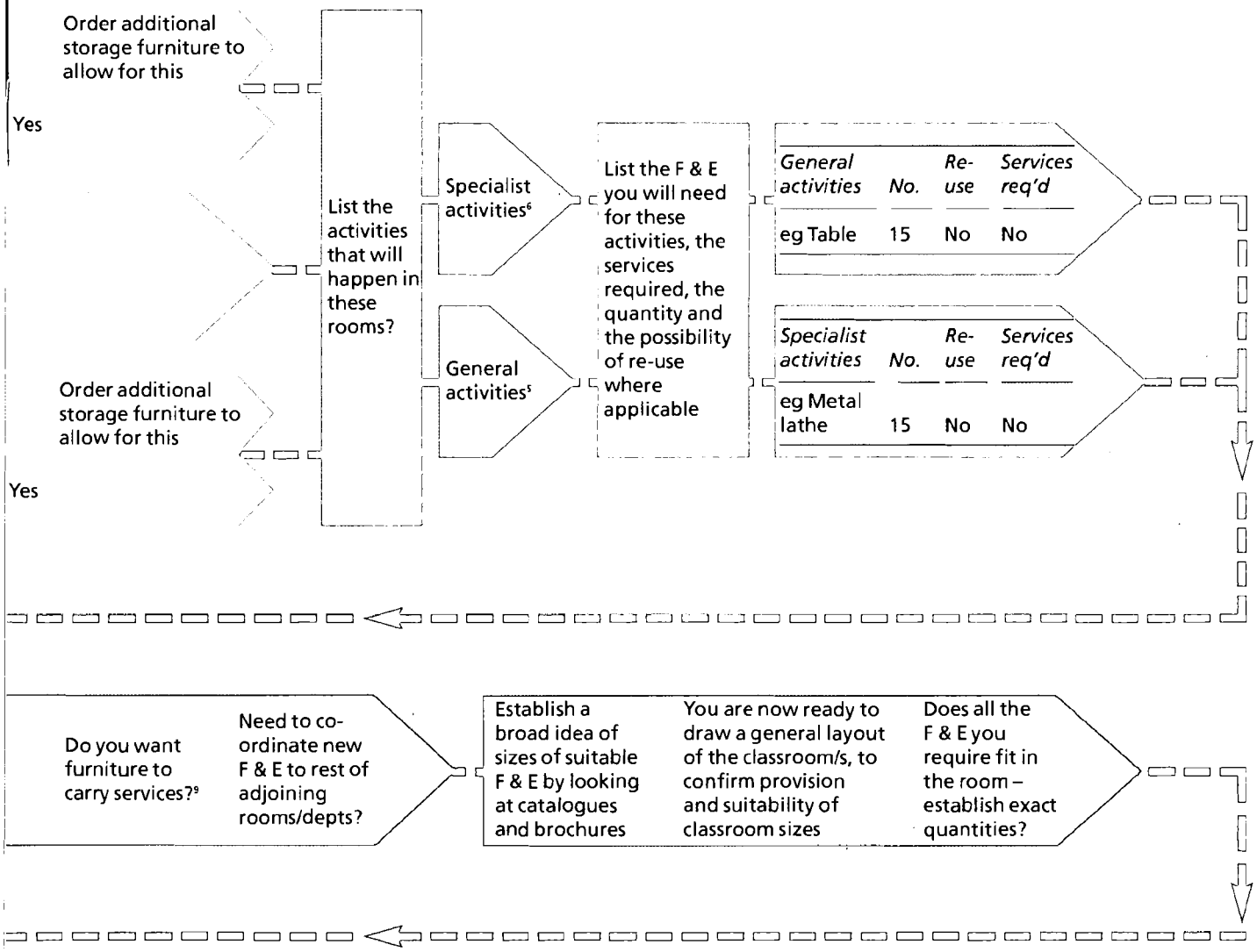

Notes

1 See para 3.1.
2 If room sizes differ from those recommended in BB82 (see Appendix C/1) it may be necessary to carry out minor building alterations, i.e removing partitions.
3 BB82 gives recommended areas in relation to group size. Reading from these graphs may determine max. group size possible in individual rooms.
4 BB82 gives a wide range of recommended areas for all aspects of schools accommodation.
5 See para 1.2.
6 See para 1.2.
7 See Section 2.
8 See Section A/2.5.
9 See Section A/1 'Specialist tables'.

draws together many of the issues raised in Appendix A in a flow chart to help you identify the kind of information needed.

4.13 In researching this document, over forty suppliers were consulted. Almost all stated that a thoroughly researched and clear specification from schools would make the supply process more efficient. They felt this assured them that the school had determined the product(s) it wanted and had chosen appropriately. (Suppliers reported that some schools are not always sure of what they are ordering and therefore sometimes reject a product on sight)!

4.14 If necessary, ask a supplier for a sample specification they feel content to work to and which gives all the information they need. You should make sure that the specification is sufficiently wide ranging to include similar equipment from other suppliers that would be equally suitable. Fig 4/3 shows a detailed sample specification for fixed furniture in a science laboratory and illustrates the need for a thorough knowledge of the products necessary for specialist environments (although not all F & E needs to be this comprehensive). Appendix A gives advice on specification issues whilst Appendix C gives references to further sources of more detailed information.

4.15 Having a clear specification at this stage will undoubtedly assist the smooth running of a project and lead to you obtaining the product you want at the right price. All tenderers should quote on the same basis. Developing a specification may therefore be useful even if the contract value is below the threshold where tendering is required (see also para 4.16). In some small projects appropriate contracts may previously have been set up through the LEA. These may well be the most cost effective purchasing route as the tendering process will have been carried out already (see also para 4.17). Alternatively, if a pre-existing arrangement is inappropriate for your needs, your LEA could carry out the tender process for you (see also para 4.17). Fig 4/4 sets out the procedures necessary for the tendering process (see page 28–9)

Methods of Tendering

4.16 Once the preparatory work is complete you should establish the competitive process to be carried out. The scale of the project will determine the level and complexity of this process. If you are involved in capital projects where a large sum of money is being spent, a tender process will probably be required. Tenders provide tangible proof that value for money has been achieved. Each LEA will have a stipulated level at which tenders should be sought. This value level varies from LEA to LEA and will normally be detailed in their standing orders and your financial regulations. Below the level requiring tenders it may be necessary to get quotes from your LEA's approved suppliers – although some LEAs may allow quotes from suppliers you, as a school, have found. Some orders may fall below the need for any competitive process to be undertaken. It is important that this situation is discussed with your LEA from the outset. The number of tenderers invited will vary with the scope and type of requirement and the process that you have to follow – too many and you could have a problem evaluating them, too few and you have no competition. As a rule of thumb, between 3 and 6 tenderers is usually adequate. In the case of Voluntary Aided (VA) schools, depending on the type and cost of a project and after consultation with the LEA, the tender procedure will be scrutinised by the DfEE's building professionals.

4.17 It is important to remember that, although some of the processes may appear bureaucratic, a properly structured competition process is good practice. It is both a valuable tool in obtaining the best from the market and a clear demonstration of public accountability. Don't forget, however, that you can often use existing arrangements set up by an LEA/LEA consortium or a privately owned purchasing organisation, as long as it can be demonstrated that these have been set up in accordance with the rules (see also para 4.5). You should satisfy yourselves that these privately owned organisations are equipped to comply with the legal framework and that they offer the proper assurances. If in any doubt you should request a copy of the covering documentation and have it checked by your legal adviser. Dealing with a local authority arrangement may offer VAT advantages in schemes not funded directly by DfEE or LEA grant (see also paras 4.33–35). Section 5 looks in detail at these organisations.

4.18 Under no circumstances should a company carrying out a tender exercise on your behalf be allowed to include themselves, or an associated company, on the list of suppliers invited to tender. Section 5 looks in detail at the kind of services different suppliers offer and the way in which they carry out these services.

Science Laboratory Furniture

Solid Grade Laminate Worktops

- *Solid grade laminate work tops shall be machined from 15mm thick material having a maximum length between joints of 3000mm. Joints shall be machine routered to give square butt faces and locked together using worktop connectors type xxx.xxx. as manufactured by xxxxx Limited, a silicone sealant will be used on each joint to prevent ingress of liquids.*
- *Worktops shall be supported off and securely fixed to a timber wall batten and the underbench cupboard units. Where unsupported spans of greater than 1500mm occur epoxy coated mild steel box section leg supports would be employed.*
- *Standard worktop edge profile would be square with 1mm chamfer to top and bottom. Other edge profiles are available.*
- *A 12mm x 60mm high solid grade laminate wall strip will be installed on all benching that butts with the wall. Wall strips will be bedded on silicone sealant and fixed to the wall using brass or stainless steel cups and screws.*

Furniture: Carcass Construction

- *All carcasses will be constructed from 18mm thick medium density fibre board having both sides faced with melamine light grey and having all facing edges lipped with 3mm thick PVC edging dark grey.*
- *Carcasses will be assembled using xxxxx housings and connecting bolts and each carcass shall be securely fixed to adjoining units and worktops using special purpose connecting screws.*
- *Back panels will be from 6mm thick melamine faced medium density fibre board and will be removable, sink cupboard units will have a half height removable back panel.*
- *Where shelves are required these would be made from 18mm thick melamine faced medium density fibre board, PVC lipped to front and rear edging only and supported off height adjustable plastic studs.*
- *Door fronts, drawer fronts and facia panels will be manufactured from 18mm thick melamine faced medium density fibre board and having sides and bottom edges lipped with 3mm thick PVC edge light grey.*
- *Base and back of drawer units from 12mm thick white melamine faced MDF board.*
- *Drawer sides and runners from white epoxy coated metal complete with adjustable fixings for drawer fronts.*
- *Hinges are adjustable 265° cranked opening type, screwed to both door and unit carcass.*
- *Door and drawer pulls shall be a full width epoxy coated aluminium extrusion (colour to choice).*
- *All units will be fitted with adjustable feet for site levelling.*
- *Infill panels to knee spaces and spaces between cabinet/wall and cabinet/cabinet will be from 18mm thick melamine faced medium density fibre board having 3mm PVC lipping and secured to soft wood battens using brass or stainless steel cups and screws.*
- *On completion of installation a bead of silicone sealant will be applied between the plinth and floor covering to prevent ingress of water*

Fig 4/3: Sample specification – Science Laboratory Furniture

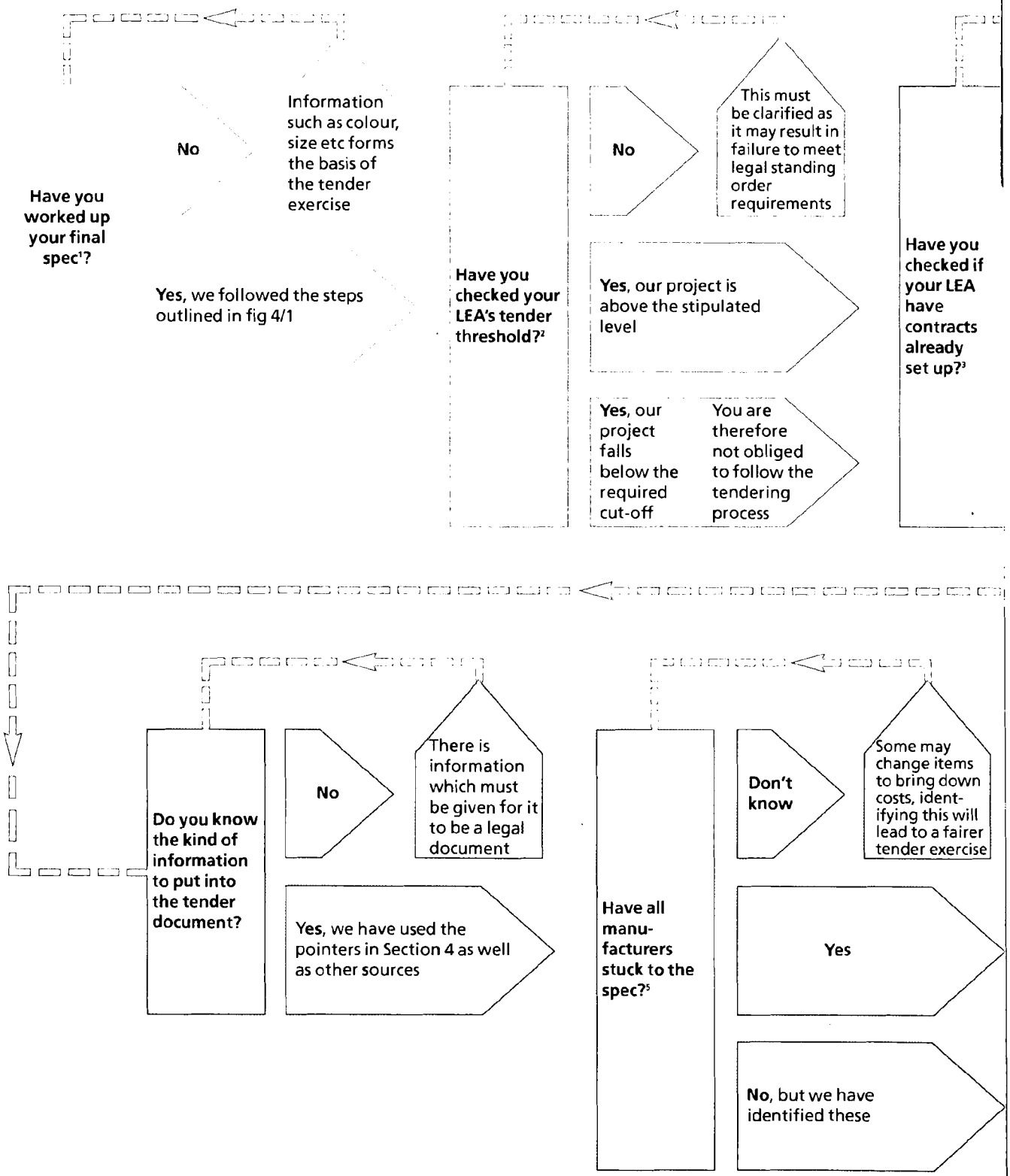

Fig 4/4: Step 2 – The Tendering Process

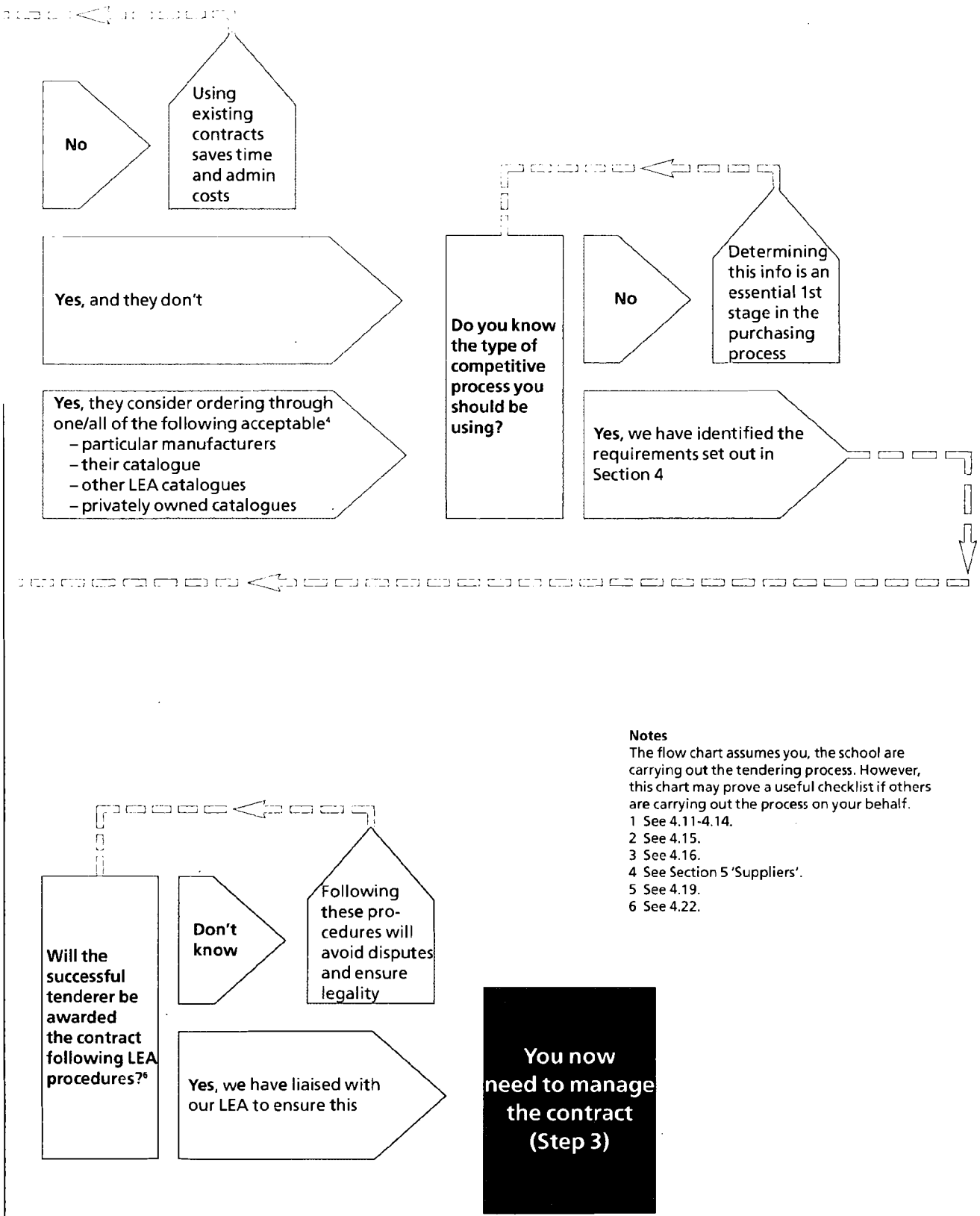

Notes
The flow chart assumes you, the school are carrying out the tendering process. However, this chart may prove a useful checklist if others are carrying out the process on your behalf.
1 See 4.11-4.14.
2 See 4.15.
3 See 4.16.
4 See Section 5 'Suppliers'.
5 See 4.19.
6 See 4.22.

Tender Documentation

4.19 The specification undoubtedly forms the basis of any tender document. Other components also need to be included if the process is to be effective and tenderers are to make their bids on a consistent basis. The tender document should therefore include:

- *Performance Criteria:* this should ensure that the tenderer knows exactly what is required (in the form of a specification) and what will happen if the goods or service are not delivered or do not perform as required;
- *Criteria for Award:* a statement of how the contract will be awarded with specific, measurable criteria, which would normally include a proper balance between cost and quality;
- *Pricing Format:* this should indicate how costs are to be quoted by the tenderer and what they must include – it is confusing and misleading if tenderers do not quote on a similar basis;
- *Information Schedules:* these should include any further details that will help tenderers to understand your requirements;
- *Instructions to Tenderers:* these are clear and precise instructions on how to go about completing and submitting the tender, e.g. instructions for return of the documents, the way in which they should be completed, a contact point for any queries (be aware that any information given to one tenderer must be passed to all the others);
- *Conditions of Contract:* these are conditions that the contractor will have to observe during the contract period, e.g. the basis on which the contract can be terminated, and the consequences of this, liability for failure, basis for payments, variation and future change to contract, contract period, insurance and indemnity, propriety, equal opportunities, health and safety, etc.
- *Closing Date and Return Details:* this is a specific date which should give tenderers sufficient time to prepare bids, and yourselves enough time to assess and award the contract.

4.20 Once the tenders have been received and opened they should be considered in accordance with the stated award criteria, including a full assessment of the cost and quality requirements. The contract should be offered to the tenderer who best meets these requirements. It may be that the lowest price is the obvious winner, but it is often necessary to look carefully at the costings to ascertain how closely a manufacturer has adhered to the specification: some may change items in order to bring down costs. A good understanding of the products you are asking for will help you to understand what can often be quite subtle changes to the specification. Obviously, the better your specification and understanding, the easier the tender will be to evaluate (see also para 4.14).

4.21 Occasionally, a supplier may return a tender with a different or innovative offer, this is particularly pertinent with products using new technologies. These offers need to be dealt with very carefully because anything that changes the basis of the original tender may disadvantage other tenderers and could be seen to be unfair. Consult with your LEA if you feel that the product you wish to purchase has no competitor – they may have a method for dealing with this situation which still results in Best Value (Case Study B/3 looks at this situation).

4.22 In complex projects there may be a need for tenderers to make presentations, or for further clarification of some details. You should ensure that where this is the case your LEA's procedures are followed and that everything is properly documented and recorded.

4.23 You should also ensure that any contract is formally awarded in accordance with your LEA's standing order procedures. All documentation should be kept securely as it will be the reference point in the case of any dispute.

4.24 If a product has only one supplier, or you are keen to buy a particular product to ensure compatibility with existing equipment you should follow your LEA's requirements for justifying the acceptance of a single tender.

4.25 As long as it is not in conflict with the European Procurement Directives or LEA rules regarding disaggregation (the 'breaking down') of the contract, a number of tenders could be sought for the various elements of a project. Your LEA should have a policy on the extent to which contracts can be

'broken down' into smaller components. For example, do all chairs ordered have to be within one contract or can chairs be divided into separate types such as VDU chairs and easy chairs (see also para 4.5)? Bear in mind that, even if some disaggregation is allowed, savings made may later be lost through a number of separate delivery charges and small order 'on-costs'.

Step 3 – Managing the Contract

4.26 If you as a school are to manage the tender exercise, then once tenders have been awarded you should notify unsuccessful tenderers, thank them for their efforts and provide a list of prices received (do not connect the prices to any particular companies) – this allows these tenderers to re-assess their bids and is useful feedback for what can often be considerable effort on their part. The contracts set up with the successful tenderer(s) will need to be properly managed to ensure the success of the project. You will need to invest time in monitoring the delivery of the contract. The essential elements of this are to ensure that:

- all concerned know what the contractor is to provide;
- performance is measured using the criteria detailed in the tender;
- regular review meetings are set up and adhered to;
- a good working relationship is developed with your supplier;
- problems are pointed out as soon as they emerge;
- attempts are made to resolve any disputes by conciliation;
- if conciliation fails, sanctions provided in the contract are used;
- punitive measures are not taken unless genuinely appropriate;
- relationships are kept strictly professional;
- school administration is not the cause of poor performance;
- invoices are checked and paid promptly when goods have been delivered to satisfaction.

Fig 4/5 sets out the considerations necessary when managing the contract (see overleaf).

Organisation and Communication

4.27 The contract will run more efficiently if one individual is responsible for its management and acts as the point of contact for queries and decisions. Some suppliers emphasised the need for a single representative from the school to co-ordinate the requirements of other teaching staff and act as a contact should there be any queries. This person could be a teacher, relieved of some of their teaching duties for the duration of the project, a Governor; the Head; the Bursar; an LEA employee or a consultant. Whoever is chosen as the liaison person or project co-ordinator (here referred to as the liaison person) he or she must have the time and commitment to carry out the work to an agreed timetable. Ideally, however, two people should be involved in purchasing decisions, so that if one person is not available there is someone else with the knowledge to progress the project.

4.28 Changes can often occur during the project. These will need to be negotiated between the suppliers and the school. The liaison person should make the necessary decisions after discussing them with those colleagues most affected. A liaison person should be able to make decisions that reflect the needs of the majority of staff, decisions suppliers feel unable to make as, in their view, the school as a whole is the 'client', although it is of course sometimes the LEA.

4.29 The liaison person for a particular project may also take general responsibility for all F & E provision across the school. This could include taking charge of the termly/yearly standard renewal of small equipment (see also para 3.32) such as glassware for laboratories or handtools for design and technology, as well as larger projects which require more planning and administration. Standard replacement expenditure is just as much a part of a School Buildings Development Plan (SBDP) as a capital project, so it makes sense for a single member of staff to be responsible.

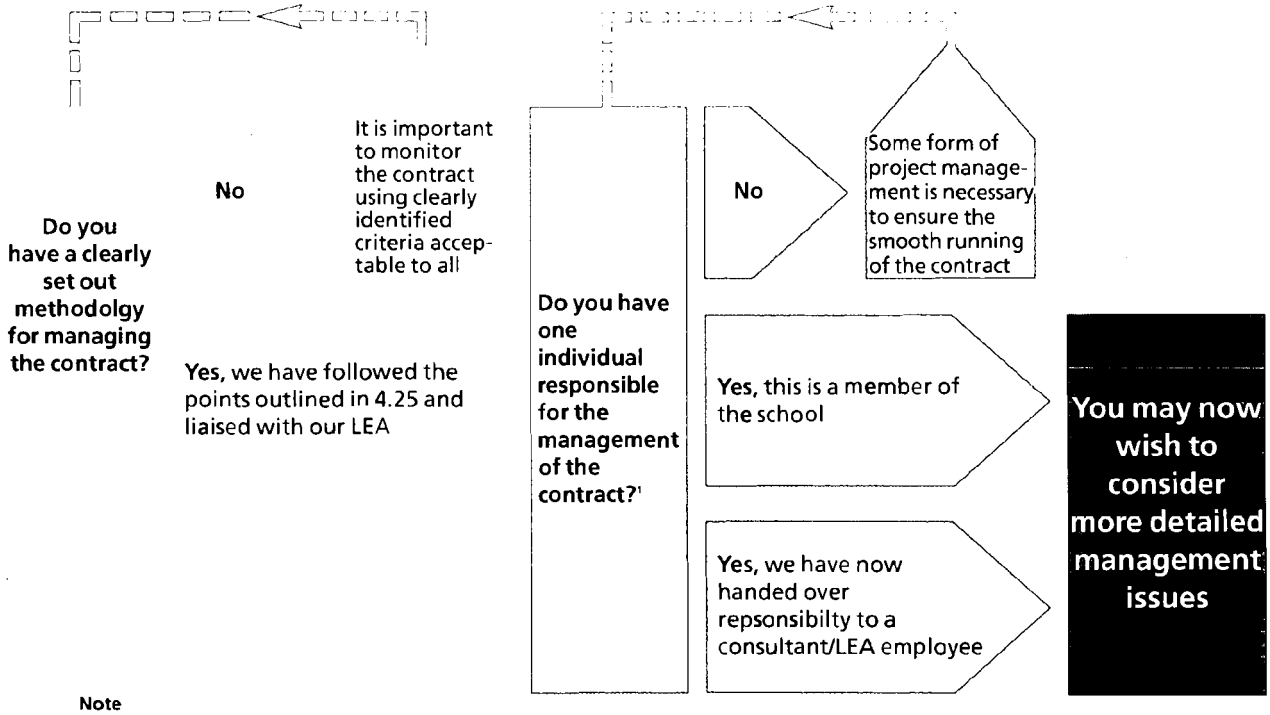

Note
1 For more information of F & E management see paras 4.26–4.31.

Fig 4/5: Step 3 – Managing the contract

4.30 Once a project budget has been identified it will need to be kept under review. By being available to make swift but informed decisions the liaison person can ensure that a project does not go over budget. Over-spend can occur in all but the smallest projects and you should not assume that because a job is relatively straightforward decisions will only need to be made at the specification stage or that it will stay within budget.

4.31 During the development of a project (particularly large building projects) the balance of items in each category may also change – for example, an item of furniture which was initially classed as 'fixed' may become a 'loose' item (see Section 3, 'Categories of F & E and Their Budgets'). A liaison person's job should include ensuring that, if categories change, the money allocated to those categories is also transferred to avoid confusion and financial mis-management. In most cases these changes should be done in consultation with the LEA. In VA Schools, costs need to be apportioned from the start of the project before it commences, and agreed by the LEA, if they are changed as the project moves on, the LEA could not have the funds to meet any change in the liabilities – any changes to costs therefore need to be agreed by the LEA.

4.32 Software systems are available which will enable you to make an inventory of all your F & E – where it is and who has responsibility for it. This can help you to:

- keep track of where items are kept;
- run a 'leasing' system where one department can borrow resources from another, avoiding unnecessary purchases and duplications;
- ensure unwanted resources are transferred to another department where they can be used more effectively;
- keep a record of the resources bought and the money spent in a year to help plan spending for subsequent years, thus aiding the development of the SBDP;
- input estimated renewal dates to remind the school when products need replacing. This can also help with the SBDP which must incorporate forecasted replacement expenditure;
- have easy access to all information on products for yearly auditing;
- carry out necessary health and safety procedures such as the annual check of electrical equipment;
- keep subjective assessments of the value/usefulness of products – where products were particularly successful or unsuccessful this could be noted in case they are ever required again (ideally the liaison person should co-ordinate this task).

Other Purchasing Issues

VAT Issues Relating to Purchasing Furniture and Equipment

4.33 Following the enactment of the Schools Standards and Framework Act 1998, Customs and Excise have confirmed that, for VAT purposes, the governing body of any maintained school – community, foundation, or voluntary aided – will be seen to be acting as an agent of the LEA for purchases of furniture or equipment out of the delegated budget or from amounts given to the school from LEA central funds. Under Section 33 of the VAT Act 1994, LEAs are entitled to recover VAT incurred on such purchases (see also Section C/1).

4.34 It is important to note that this only applies to furniture or equipment funded out of LEA budgets, LEA central funds allocated to the school, or DfEE grants paid through the LEA. Your LEA VAT officer will be able to advise you on your specific project.

4.35 Where the governing body of a school obtains funding other than via the LEA , for example, income generated by the school itself, you as a school will not normally be able to recover the VAT incurred. However, you can opt to donate the money to the LEA for them to buy F & E on your behalf. The LEA would have to place the order, make the purchase, receive the goods and make the payment using their usual value for money route.

Discounts

4.36 Discounts can be obtained in a number of ways. Generally, the larger the order the bigger the discount. The ways in which different companies offer or negotiate discounts are discussed in Section 5. It is worth noting that discounts from many suppliers are commonly offered:

- when schools place orders away from busy times (May to September);
- when schools give long lead times for orders at any time of year;
- on flyers sent through the post – these can offer good deals but are easily lost in general staffroom correspondence, unless they are directed to the liaison person;
- over the Internet – many companies are now using the Internet as way of promoting their products[1].

4.37 In some instances however what appears to be a heavily discounted product may not necessarily offer best value for money. Always check the net price to you after the discount has been deducted and ensure that there are no hidden costs such as high carriage charges or maintenance arrangements that

1 Check that relevant standards have been met, see Section A/3.

tie you in to ongoing expenditure which may turn out to be poor value over the life of the equipment. Be sure to check carefully offers from companies with whom you are not familiar (see Section 2), or that do not belong to a recognised trade organisation (see also para 2.14).

Deliveries

4.38 The role different suppliers play in ensuring reliable delivery of F & E is discussed in detail in Section 5. Throughout interviews with suppliers, deliveries were a common concern. Many companies identified ways in which schools could ensure that deliveries were more efficient. They were particularly keen for schools to:

- supply a name and contact number for deliveries occurring in holiday times, in case of queries;
- give exact opening and closing times of the school site both in and out of holidays;
- make clear where delivery lorries can park;
- be clear about the delivery point – some companies will deliver to individual rooms, some to the nearest covered entrance and companies may charge for deliveries to the classroom so this should be ascertained at an early stage (see also para 2.16);
- be realistic about the quantity of products ordered and the distance from which they come – a company two hundred miles away could not be expected to deliver one cupboard free of charge;
- ensure that a lorry can turn on your site and there are no access restrictions, if not it may be necessary to make other arrangements;
- be realistic about the length of time it takes to receive a product, particularly large items – most firms estimate between four to six weeks even in quiet times;
- ensure rooms are ready to accept new F & E (when applicable);
- expect to help with unloading in the case of big orders – school site managers may be needed as a company will only send one or two people to unload unless pre-arranged;
- check the quality of products as thoroughly as possible – complaints about transit damage can then be more easily proven;
- in large projects where a number of different deliveries may be necessary, try to stagger them to avoid traffic jams on and around the school site. This may be difficult but a liaison person should aim to get specific dates and morning or afternoon delivery times out of most suppliers.

Leasing

4.39 You may feel that leasing an item of F & E offers several advantages, including the opportunity to:

- try out a new product without any major financial commitment;
- utilise a product you could not otherwise afford;
- update the product on a yearly basis as part of the rental agreement (this is particularly useful for 'hi-tech' products which are constantly being developed and refined);
- enter into an arrangement where after a number of years the school owns the product; hires it for a reduced cost or can benefit from the sale of the product to an outside party. Refer to your LEA for advice on whether a particular agreement is within the rules.

4.40 The money used to lease a product must be clearly identified and approved by Governors and, if applicable, your LEA. LEAs will specify whether money for leasing should be taken out of schools' recurrent or capital budgets (see Section 3, 'Capital Funding'). It is worth identifying:

- the company's minimum period for a leasing agreement – the product may prove to be inappropriate and years of commitment to a lease could be frustrating;
- the maximum period of a leasing agreement – if it is longer than the life of the product being leased it may not be economically viable;

- whether payments are fixed or will alter with changes in interest rates;
- whether the rental company is a specialist in education and understands the workings of a school budget, etc;
- whether the company can give the names of other schools as references.

4.41 Photocopiers are the most obvious example that schools choose to rent but they are no longer the only item. Information communication technology (ICT) is an area where leasing has become more popular. It is wise to shop around for deals in leasing and buying computers, examining the long term financial commitments of both. Your LEA will be able to give guidance on this issue (see also Appendix C for useful references on ICT).

Terms and Conditions

4.42 When you, as a school, accept a quotation from a supplier you automatically agree to their terms and conditions (Ts & Cs) unless you agree otherwise before placing your order. Although the majority of Ts & Cs are usually fair to both parties you must ensure that you are absolutely clear what they entail and that you agree to them as they are legally binding. If you are in doubt ask the supplier for a definition or, alternatively, consult your LEA or legal advisor. Terms and conditions are usually printed at the back of the contract and are many and varied but may include:

- *Validity:* a stated period of time during which the contract details are valid and can be accepted;
- *Basis of Proposal:* the cost indices the project value is based on, usually set by different industry bodies;
- *Payment:* timescales when payment or a number of separate payments are to be made;
- *Drawings and Specifications:* a statement ensuring that the customer does not reproduce drawings and specifications without the company's prior written permission;
- *Variations of Contract:* situations when the value of the contract may differ from that stated, e.g. additional work given to the company, delays caused by the customer, etc.;
- *Work Not Included:* a list of all the work not costed in the contract value;
- *Responsibility on Site:* a statement of the areas of responsibility the customer must have, e.g. protection from bad weather on site, the provision of suitable storage for the company's work equipment, etc.;
- *Delivery or Completion Date:* a list of exceptional circumstances whereupon the contract completion date may be delayed, e.g. strikes, fires etc.; a statement which emphasises the penalty clauses charged to the customer should they be unable to take delivery of the product(s) featured in the contract;
- *Ownership and Goods Protection:* a statement to ensure that the customer is aware of his/her responsibility for the contractor's property whilst they are working on the customer's site;
- *Carriage:* a statement to make the customer aware that this will be an additional charge unless the contract specifically includes delivery;
- *Defects:* a stated timescale during which the company will return to site to repair any defects which may arise after completion of the project.

Next Steps

This section should have raised awareness of the stages you should follow when buying F & E. It should enable you to feel confident to carry out the process yourselves or to employ others to do it on your behalf. It should also enable you to identify the purchasing procedures your particular project requires, i.e. the need to tender, to go to the European Journal, etc. With the purchasing process explained, the next section looks at the kind of suppliers you may choose to work with and the role they can play in this process.

Have you looked at...		As a result we are aware of...
Following a purchasing strategy?	Yes, we have also liaised with our LA	The processes necessary for fair and effective purchasing
Organisation and communication?	Yes	The need for a liaison person to ensure the smooth running of a project
Other issues such as delivery, VAT, leasing etc?	Yes	The need to seek advice where necessary and to gather information from potential suppliers
Terms and conditions of contracts?	Yes, we are aware of standard T & C clauses	The need to clarify T & C's in contracts in order to fully understand the agreement we are signing

Fig 4/6: Summary flow chart – Purchasing

SUPPLIERS

SECTION 5

There are a considerable number of organisations available to assist schools in furniture and equipment (F & E) procurement. The services offered by these organisations vary considerably. You should consider these differences in order to determine which organisation is best able to meet your needs for a particular project. This section describes the types of services offered by each organisation[1] to help you select the most appropriate supplier.

The Routes of Supply Available

5.1 It may be necessary to use a number of different suppliers throughout the five year period of a School Buildings Development Plan (see also paras 3.1–5). Providing you have an efficient co-ordinator to oversee all projects and enable a 'common thread' of management to run through them, the 'mixing and matching' of appropriate suppliers to particular projects may be a prudent strategy (see also paras 4.27–32).

5.2 The routes of supply broadly fit into the following categories:

- Local Authority (LA) Supplies Departments.
- LEA Purchasing Consortia.
- Private Sector General Supplies Catalogues.
- Manufacturers.
- Architects and Consultants.
- Building Contractors.

Local Authority Supplies Departments (LASDs)[2]

5.3 Your LA may have a supplies department which will buy and sell F & E products on your behalf. They will use their bulk purchasing potential as a way of negotiating discounts with manufacturers. If this is the case, your LA will produce a catalogue of products for you to select from, and/or they may be affiliated to a consortium (see also paras 5.9–21) who will also have a catalogue. These catalogues are sometimes available on disc (see also para 2.6).

5.4 Supplies departments vary in size, although this is not always related to the size of the LA they are serving. The level of service, expertise and ability to supply also varies considerably from LEA to LEA. The larger supplies departments are likely to be able to offer a wider range of services, including planning, expert advice on particular items of F & E and advice on organising major projects. Some LEAs may not offer these services directly, preferring to deliver them through their affiliation to a consortium. The costs incurred in providing these services may be charged as a fee or as an 'on-cost' on the products. These costs should be added into the equation when choosing the potential supplier (see also para 2.16).

5.5 Most LASDs have a wide range of educational experience and can offer advice on the performance and quality of the items they supply. This experience is gathered over many years, and the importance of this must not be underestimated. Some supplies departments offer their own range of furniture, based on long established specifications written to the relevant standards (see Section A/3 'Quality Issues'). A large supplies department may also be able to arrange samples from manufacturers or visits to other schools using their products (see also paras 2.8–11).

---

1 Information for this section has been gathered, in part, through questionnaires sent out to around 40 suppliers.

2 In this case reference is made to a Local Authority (LA) as Supplies Departments will often supply other Authority sectors such as Social Services.

5.6 It is most likely that an LASD will have already tendered for the range of F & E displayed in its catalogue. It will have satisfied the requirements for competitive tendering to comply with its standing orders and EU procurement obligations (see also paras 4.4–11). This should remove the need to carry out a tender exercise yourselves as your authority will have already done so on a larger scale. Be aware, however, that there may be instances with some smaller LASD catalogues where some of the F & E featured in the catalogue is not covered by the requirements of Standing Orders (although most will be in the price range that the LASD feels is reasonable) – some items may be in the catalogue to offer a wide choice to schools and opportunities to manufacturers. These instances are in the minority but, if in any doubt, you should ascertain the position with your LASD and determine which items have been through a procurement process which fully meets EU and standing order requirements.

5.7 Some LASDs may have contracts already set up with manufacturer(s) of fitted F & E. Although the supplies department does not directly tender for each project, as each will be different, the contract(s) will be arranged to sit within the LEA's expected price scales. In these cases, schools will generally deal directly with the most appropriate manufacturer. The supplies department will act as initiator and in some cases as 'trouble shooter', chasing up late deliveries, etc. It is worth ascertaining whether this service is available from your LEA, particularly in building schemes where the majority of F & E work may be fitted. Alternatively, supplies departments may set up tender exercises for you (see also para 4.15), using their established contracts and knowledge of this complex legal process which could be advantageous.

5.8 Consortia and LASDs operate under the Local Government (Goods and Services) Act 1970 and, as such, can only supply to public sector organisations and some registered charities. For this reason, you cannot normally instruct a privately owned building contractor, for example, to supply goods bought from an LASD or consortium.

Local Authority Purchasing Consortia (LAPC)

5.9 A consortium (in this context) is a collection of LAs (usually located near to each other) who combine their considerable buying power to negotiate the best possible discounts on products. There are three types of LEA consortium:

- those that are set up as joint committees and exist as an entity and supply goods through a catalogue operation;
- those that are set up as a federation with the individual member authorities supplying arrangements through their own catalogue arrangements; and
- purchasing partnerships, which are often focused on particular areas of activity.

5.10 The benefits of working with Local Authorities can often be enhanced by consortia as, by aggregating demand, they can achieve higher levels of discount.

5.11 Consortia usually have specialist buyers to advise schools and select products. Consortia operating from an office and warehouse base can offer the convenience of "one stop shopping" (i.e. one order/one invoice) which could reduce your administration costs dramatically.

5.12 Whilst organisations vary considerably on the range of products they offer and the way they operate, they generally fall into the three categories, which are outlined below.

Joint Committee Consortia

5.13 This type of consortium is collectively owned by a number of LAs and acts on behalf of its member authorities to offer prices and services which reflect their combined buying power. It is an organisation in its own right which buys and sells products for schools and other LA bodies. It has a central office with warehousing which stocks many hundreds of products which can be delivered directly to schools on receipt of an order.

5.14 Schools from non-member authorities can also use their services but may pay a small premium. Some organisations choose local suppliers, for monitoring purposes and ease of delivery. If a school orders a small amount of resources from a consortium a long way away this may be problematic and additional charges maybe incurred.

5.15 On medium to large projects, particularly those with an element of fitted F & E, some consortia will offer a full service of design, planning and supervision, working closely with their supplier(s) of fitted F & E. There may be a fee for such work and a school should establish this at the outset. Some may charge an 'on-cost' on all products, some a flat fee and others a percentage of the total cost of the F & E supplied.

5.16 These organisations are set up to be non-profit making and any surplus made over the operational cost is usually given back to the member authorities.

Federation Consortia

5.17 This type of consortium comprises a number of LEAs combining their expertise and co-ordinated purchasing power in forming joint contracts. Contracts are tendered on behalf of all the others by individual lead LAs.

5.18 The constituent LAs sell products through their individual catalogue and warehousing operations. These catalogue operations operate in a similar way to the stand-alone organisations and offer a very similar service. As with the stand-alone consortia these operations are set up to be non-profit making.

Purchasing Partnerships

5.19 This type of consortium is formed by a number of LAs agreeing to combine their purchasing power, to organise contracts through which schools and other local authority departments (e.g. social services) can procure. They normally do not exist as stand-alone organisations but elect officers from each of the LAs to tender and organise specific contracts. Some of these will be based on their own well established specifications.

5.20 These contracts are then offered for use in the form of a schedule or a catalogue(s). You, as a school, would carry out all the transactions with the specified manufacturer or supplier, including ordering, progressing and paying for the goods. You would quote the contract reference number in order to achieve the arranged discount. This arrangement may involve more administration time than a standard LA supplies department catalogue where one order can include a number of different products.

5.21 Services are usually restricted to member LAs and do not normally include design and planning. This is particularly true for fitted F & E where each project (e.g. design and technology workshops) requires specialist input to take account of particular features. In these cases, going direct to a manufacturer with a more in-depth understanding may be more appropriate (see also paras 5.32–47). Purchasing Partnerships may have contracts arranged with manufacturers of fitted F & E however (see also para 5.7). You may use these contracts to obtain both the products and a design and planning service directly.

Modes of Supply – LASD and Consortia

5.22 The following modes of supply apply to both LASDs and Consortia. Each may offer some or all of the following methods of procurement.

5.23 *Stock:* these products are featured in the catalogue and are held in stock in a central warehouse. They tend to be low value, high volume items like pens and paper. An order or requisition is raised directly with the supplies organisation who will deliver and invoice directly to you. Bulk buying allows much greater discounts and writing a single order or requisition for multiple items results in reduced administration time. Delivery times tend to vary but are generally from 7 to 14 days.

5.24 *Direct Supply:* is most widely used for bulkier F & E items which cannot be held in stock easily. You select the product(s) featured in the catalogue, raise an order or requisition with the supplies organisation, who in turn, will raise an order with the manufacturer or supplier. The manufacturer or supplier will deliver to you directly and invoice the supplies organisation, who in turn would invoice you. Delivery times vary considerably from product to product.

5.25 *'Call Off' or Contractual Arrangements:* products and services are offered in either catalogues or schedules and allow you to deal directly with the named supplier or manufacturer, usually quoting a contract reference. You can then procure goods or services at the rates negotiated. All transactions, including ordering, delivery, invoicing and payment, are carried out between you and a named supplier or manufacturer.

Private Sector General Supplies Catalogues

5.26 As the name suggests, these are commercial companies that offer a comprehensive range of products, specifically targeted at the educational market. Like LAs, catalogues will use their potential purchasing power to negotiate discounts on products. Catalogues can be broadly split into two categories:

- those which supply others' products only;
- those which also manufacture some products.

5.27 Many catalogues fall into the latter category, as manufacturing their own products allows them to have a unique share of the market whilst still offering schools the products that other suppliers offer. It is useful to get a number of catalogues to assess the product ranges (see also para 2.5).

5.28 Most catalogues are freely distributed to schools throughout the UK, irrespective of geographical location. Others, usually from the smaller suppliers, operate on a regional basis, preferring the convenience of local deliveries.

5.29 It is advisable to compare prices as there can be considerable variation between catalogues. Similarly, the range of products offered varies considerably from company to company. Some offer thousands of items whereas others have a specific range, e.g. science apparatus or wooden furniture. Some companies offer a comprehensive range of products aimed at a particular age group or curriculum subject.

5.30 As a general rule, the larger companies in this sector offer a wider range of products including high volume consumable items (see also para 3.35). It is unusual for companies of this type to include fitted F & E within their range. This means that they are unlikely to act as sole supplier of F & E in a large building project – other suppliers must also be considered.

5.31 There are exceptions, but most catalogue companies do not offer planning and design services. They tend not to supply product ranges other than those featured in the catalogue, although exceptions may be made where the products are part of a large capital project.

Manufacturers (General)

5.32 You may find it beneficial to order directly from a manufacturer of a furniture or equipment item. Most manufacturers who supply to education recognise schools as their main customer. This suggests that they understand the specific issues of educational supply such as quality, delivery times, etc. Most manufacturers will have a better understanding of schools' individual needs if they deal directly with the school rather than supplying through a third party. You should ensure that those who do not supply mainly to education can demonstrate their understanding of the market and its demands.

5.33 Manufacturers will usually install any fixed items they supply – a useful service which should not be underestimated. Some will employ their own fitters rather than sub-contracting the labour. You should weigh the significant advantage of using fitters who have a good working knowledge of the items concerned against the costs incurred if those fitters have to travel significant distances (and perhaps be accommodated overnight).

5.34 You could go directly to a number of different manufacturers and have the advantages of working closely with each of them. However, this does require careful management by a liaison person (see also paras 4.27–32). Different invoices, delivery times, and so on, will need to be dealt with, particularly on a large project. It may be possible to use LEA contracts, if applicable (see also paras 5.3–21).

5.35 Some manufacturers of fitted F & E specify that they *must* install their own products. It may be wise however to limit their number to reduce management problems (see also para 5.61).

5.36 Most manufacturers will feature other companies' products in their brochures. This enables them to offer a wider range of complimentary products, e.g. a laboratory furniture company will buy in items such as stools. If standing order requirements allow it, you may find it useful to purchase these products (which will undoubtedly carry an on-cost). It will save time and make deliveries more convenient. Some manufacturers supply a wider range of products than others so it is worth sending for a number of brochures (see also paras 2.4–7). The British Educational Supplies Association (BESA) has a useful list of manufacturers and their products on their website (see Section C/2).

5.37 Discounts may be offered to schools which purchase products in large quantities directly (the same discount would probably be given to a catalogue or procurement agent who buys in bulk however). Manufacturers tend to offer better discounts on their own products than on the items they buy in because they are paying an additional cost to the supplier themselves. Generally, the more items a manufacturer makes the greater the likelihood of a discount.

5.38 If products are damaged on delivery, the school can go directly to the source supplier for replacement or repair. Most manufacturers offer an after-care service of up to 10 years, although almost all will charge for this service. Some manufacturers will also survey schools' existing products and carry out refurbishment work (see also para 1.15).

The Furniture Manufacturer

5.39 Most furniture manufacturers will act as a sub-contractor to a builder for the installation of fixed furniture. In a project involving fixed furniture but no actual building work, furniture manufacturers who are prepared to decorate the room and fit floors (a 'turn-key' package) may be useful as other trades will therefore not be required.

5.40 Dealing direct with a furniture manufacturer for the supply of F & E may enable you more easily to commission specialist 'one-off' products, such as a reception desk. This may be more difficult if you are using a third party, such as a catalogue or procurement agent. In a building project an on-site joiner could, of course, be commissioned to do the work.

5.41 Most furniture manufacturers should ideally produce layouts of their furniture, certainly if it is fitted. They will have a good working knowledge of how that furniture best fits into a room. Some manufacturers will also plan F & E not featured in their brochure. This is a useful service as you may wish, for example, to see how your fume cupboard sits within their laboratory furniture system. These layouts can often be done in collaboration with a school's educational consultant or architect. You may wish to ask manufacturers to produce layouts before tendering, and may even consider the quality of layout proposals, alongside the quality and cost of the product, as part of the selection procedure (see also para 2.18).

The Equipment Manufacturer

5.42 Most equipment manufacturers will install the items they supply (if necessary) and in some cases they may prefer to do so. This is particularly relevant for manufacturers who specialise in fixed equipment like workshop machinery, PE equipment, etc. as this requires a good working knowledge of the product being installed.

5.43 In a large project there may be a wide range of equipment and you may need to go directly to a number of manufacturers. This arrangement will enable you to get the best prices without the add-on cost often demanded by a third party, although this must be offset against associated administration costs. Your LEA may, of course have pre-tendered contracts or an acknowledged list of suppliers you could use, although this is less likely with equipment.

5.44 In a building project most equipment manufacturers will act as a sub-contractor to the builder for the installation of fixed equipment, with the builder managing the process. Providing there is good communication between building and F & E trades and work is properly co-ordinated this should be an ideal arrangement.

5.45 Depending on the number and complexity of the product(s) some equipment manufacturers will produce layouts for their equipment (if applicable) as they have a good working knowledge of how those items best fit into a room. This is a useful exercise, particularly if others are to install services that equipment will be connected to.

5.46 A few equipment manufacturers will produce layouts which incorporate other companies' F & E. This is useful if a potentially dangerous item of equipment is being installed, for example, workshop machinery, which requires sufficient working distance from the furniture provided by others. The equipment manufacturers surveyed for this document said they would like a plan of the classroom from the school which clearly showed the position of services to enable them to plan their installations.

5.47 Where manufacturers are not installing their own product it is useful to check that they have an advice line for questions on installation and use. Check that guarantees and any after-care service are still valid if others install.

Architects and Consultants

5.48 Architects (either from a private practice or from your LEA) would usually only be employed when a project involves building work – either new or refurbishment[3]. It is often sensible for them to design/specify the fixed furniture and fittings so that these fixed elements match in with the overall style of the building. They may also wish to choose the loose F & E, so that also appears to be a coherent part of the scheme – loose F & E can often appear merely as a last minute add-on in a building project. That is not to say that all architects will procure the F & E, only that they ideally should be involved with the design or choice of items. As well as the aesthetic issues, architects should consider how pupils and teachers interact with F & E in buildings and the long term maintenance and durability issues. They must also be able to ensure that projects they carry out will comply with current health and safety standards, fire regulations, the Education (School Premises) regulations and the DfEEs constructional standards (see Section C/1).

5.49 Some fixed furniture will be bespoke (i.e. designed and made for a specific site). Such furniture may be made by an on or off-site joiner, possibly based on an architect's drawings. The joiner may be nominated by the architect or the building contractor, or may work directly for the building contractor. Other, more 'off the peg', fixed F & E (e.g. science laboratory furniture) could be provided by a furniture manufacturer nominated by the architect. The architect must work closely with the manufacturer to ensure an effective, workable layout. In this situation, the nominated supplier must have been tendered for by the architect.

5.50 An architect could draw up initial F & E layouts which prove the effectiveness of a proposed scheme. This will be an important role early in the project and their associated fee must be costed into the budget. Schools should also ensure that the architect liaises closely with the F & E supplier(s) when chosen. The architect will need to ensure that the F & E supplied is a similar size to that drawn on the layout (see Section A/4) as the layout may be drawn up before actual F & E is specified!

5.51 It is worth bearing in mind that architects are unlikely to have the purchasing power of a catalogue or procurement agent although they may arrange the tender (and certainly the specification) for the fixed furniture. In this situation the architect could work with suppliers preferred by your LEA. The architect is unlikely to purchase the loose F & E. It is worth remembering that in some cases if you were to go direct to a manufacturer for both loose and fixed items together you may well achieve additional discounts.

5.52 Architects are likely to charge between 10% and 15% of the value of the project as a fee, although this will depend on the complexity of the project. It is important that architects can prove their understanding of current Building and CDM[4] Regulations. You must also ensure that they carry appropriate indemnity insurance. The Royal Institute of British Architects (RIBA) can give you information on appointing architects (see Appendix C for further references), although this advice could be given by your LEA if you were to employ an LEA architect. The RIBA also have a recommended fee scale for different project types, including education, which may be useful.

5.53 Architects can provide a strategic overview of the school site. Their skills could be utilised as part of the School Buildings Development Plan (SBDP, see also paras 3.1–5). This service may require them to work closely with an educational consultant (either an LEA employee or one from the private sector). An educational consultant is likely to act as an adviser, chiefly to teaching staff, on developments in the curriculum and the effects on resource provision. An architect's role in educational design is to listen to consultants and teachers and translate their needs into good and efficient environments. A firm which offers the services of both an architect and an educational consultant may be useful. You may wish to talk to both professionals before deciding on an appointment. An architect/consultant partnership may charge a joint fee to include both professions.

---

3 The RIBA's handbook 'A Guide for School Governors: Developing School Buildings' provides a useful insight into the roles architects can play in educational projects. For further details see Section C/1.

4 Construction (Design and Management) Regulations 1994 (CDM) define the safety processes which must be followed by any contractor working on a building site. For further details see Section C/1.

5.54 Educational consultants may be either self-employed or employed by your LEA. They may be generalist advisers or have specialist knowledge in subjects such as science or design and technology, where layouts and a good working knowledge of equipment is very important. You may feel that the fee consultants charge is justifiable if it avoids wasting money on unnecessary resources.

5.55 Information communication technology (ICT) consultants are increasingly being used for their specialist knowledge. You would be well advised to employ someone who works mainly in education due to the specialist requirements of the subject. A consultant who can give advice on hardware and networking may be a useful appointment – software choice is often best made by individual teachers. Appendix C offers some useful references on ICT issues.

The Building Contractor

5.56 A building contractor will carry out building work and sub-contract any which their company does not deal with directly. A building contractor will usually charge between 10% and 15% of the overall cost of the building, although this will depend on the complexity of the project. Sometimes an architect may be nominated by the building contractor but usually it is the other way round, particularly if you are using an LEA architect's office.

5.57 Building contractors may work alongside the architect in specifying fixed F & E items and may procure any which are not made on-site. Alternatively, they may use a procurement agent (this is fairly unusual) or a privately owned catalogue to procure the F & E. This is often a better option as catalogues will often offer discounted loose F & E products whilst building contractors will oversee the fixed F & E that catalogues so rarely deal with. As building contractors rarely involve themselves with loose F & E it is important to ensure that the two types of F & E are co-ordinated (see Section 3 'Categories of F & E and their Budgets'). Usually, an architect will be involved in choosing all types of F & E or at least the fixed items will act as project manager to ensure that others' choices co-ordinate.

5.58 Building contractors will rarely deal solely with educational work and will often have a number of projects 'on the boil'. This may lead to workers being taken off-site occasionally to do other jobs. The need for commitment on everyone's part to the timescales within the contract should not be underestimated.

5.59 Building contractors may charge penalties not only to sub-contractors who cause them delays but also to schools who change their minds on a project. Materials must be ordered and trades organised and schools who change specifications at the last minute can cause a builder a lot of problems. You must identify penalty clauses and other issues (including who purchases what) in the contract drawn up with the building contractor. Your LEA will be able to advise on this issue and most will arrange the building contract on your behalf.

5.60 Building work is often very competitive and profit margins have to be as narrow as possible. Contractors may try to make savings throughout the project and F & E is often the first victim! If building contractors are tendering for fitted F & E you must ensure that they stick to the specification you have written (see also para 4.12). Similarly, if the contractor is writing the specification you must go through it with them and the necessary quality standards must be made clear.

5.61 It is usual for a building contractor to sub-contract to a number of different F & E manufacturers for the supply and installation of fitted products. Some building contractors may insist that manufacturers supply only and that their own fitters install to reduce the management problems associated with a number of different companies on one site – this may not always be popular with manufacturers (see also para 5.33 and 5.35).

Which Purchasing Route to Choose

5.62 Once you have considered the range of services offered by different purchasing organisations, you can make a decision on which is the most appropriate for the particular needs of your project. Price is likely to be the most important factor, but it is worth gathering some additional background information. Regardless of the type of project, you may wish to determine information such as:

- years in business;
- financial stability;
- quality of installations – new and old;
- brochures;
- guarantees;
- quality assurance, e.g. ISO9000 (see Section A/2);
- safety record (if applicable);
- factory/warehouse site;
- understanding of educational building issues.

5.63 Your LEA may be able to help you on this exercise. See Section 2 for more detailed advice on some of these issues.

Supplies of All F & E and Consumable Items

5.64 For projects involving purchases of F & E items you may wish to ascertain the information set out in Fig 5/1. This may help you choose which type of supplier you employ or whether (with help from your LEA) you will organise the purchases of F & E yourselves.

Considerations for F & E Within Building Projects

5.65 The types of building project which you, as a school, are likely to be concerned with fall into two broad categories, which are discussed below.

5.66 *Small refurbishments/minor alterations:* should not involve any structural alterations. It does cover refurbishing or changing the requirements of an existing room. This type of project is usually classed as minor works and will normally fall under:

- removal of existing furniture and fittings;
- making safe any services;
- making good minor damage;
- re-routing of existing services;
- new floor coverings;
- new decorations;
- new furniture and fittings;
- re-connection, testing, commissioning.

5.67 *Major refurbishment/alterations/new build:* classed as 'major works'. This type of project will involve structural alterations, other extensive work or new build and will, ultimately, include the large-scale installation of new F & E.

	Local Authority Supplies Department	Local Authority Purchasing Consortia	Manufacturer	Catalogue	Architects and Consultants	Building Contractor
Are they able to supply within your time frame?						
Is education the pre-dominant sector?						
Are all products tendered for?						
Is it an LEA acceptable standing order arrangement?						
Do they supply products to LEA specifications?						
Are they able to supply all the items you require?						
Do they offer a single order invoice system?						
Do they offer on line or electronic ordering?						
Are there any delivery or small order charges						
How frequently do they deliver to the school?						
Are there educationalists on product selection panels?						
Do they take responsibility for delivery times?						
Do they take responsibility for damaged goods?						
Do they have a helpline for particular products?						
Do they offer after-care/guarantee on products?						
Is placing of F & E arranged?						
What is the arrangement for preparing layouts?						
Will they remove existing furniture and fittings?						
Do they provide fixed furniture?						
Do they supervise fitting?						
Is it clear who the contract for fitting is between?						
Do they act as sub-contractors for building works?						
Will they make safe any services?						
Will they make good to minor damage?						
Will they re-route existing services?						
Will they fit new floor coverings?						
Will they provide new decorations?						
Will they provide new furniture and fittings?						
Will they re-connect, test and commission existing services?						

Questions applicable only to refurbishment or new build schemes. This document assumes that renewal of F & E applies only to loose items, renewal of fixed items would result in building fabric repairs and thus become a refurbishment scheme.

Fig 5/1: **Checklist of services offered by potential suppliers**

5.68 The options for organising your projects are set out below. All are applicable to small refurbishment and minor alteration schemes. You should consider each carefully before determining the most appropriate route for your situation. If, however, your project involves major refurbishments/alterations or new build, you are advised to use either option 1 or option 2. You should determine the costs and timescales for each.

1 Hand the project over to the LEA.

2 Appoint an architect.

3 Prepare a scope of works and specification, and invite a number of building contractors to tender (your LEA will be able to advise on the building contractors on their 'Approved List').

4 Prepare a scope of works and specification for building work, tender and appoint a builder to carry out the work. Prepare a scope of works and specification for the furniture, including final connection of services, tender and appoint a furniture manufacturer or purchasing consortium.

5 Some furniture manufacturers offer a 'turn-key' (see also para 5.39) package and can therefore be included in options 3 and 4 for comparative quotations.

Next Steps

This section has described the type of organisations available, how they operate and the services they offer. You should now be in a position to choose a supplier. This is the final stage in the purchasing process and should enable you to obtain the F & E you require in the most appropriate way.

Have you looked at...		As a result we are aware of...
Local Authority Supplies Department?	Yes, we checked our LEA had one	The level of service our LASD can offer
Local Authority Purchasing consortia?	Yes, our LEA is part of one	That our LEA belongs to a consortia and of the benefits of using them and/or our LASD
Private sector supplies Catalogues?	Yes, we sent off for them at the start of the project	The different catalogue companies available and the level of service offered
Manufacturers?	Yes, for all suppliers we looked at the issues raised in Section 2	The range of products and services offered by different manufacturers
Architects and Consultants?	Yes	The services offered by different consultants and which projects would most benefit from them
Building Contractors?	Yes	The situations where it would be advantageous to use a building contractor and the services they offer

Fig 5/2: Summary flow chart – Suppliers

SECTION A/1: FURNITURE ITEMS

This section aims to set out the types of furniture most commonly available to schools. It identifies two main categories: fixed and loose. Advice on the sizes and quality of the furniture items described in this section is given in Sections A/2 and A/3 respectively. A knowledge of the types of products generally available should be helpful when identifying your needs and exploring the marketplace (see Sections 1 and 2). It is also helpful when writing a specification (see Section 4) and identifying categories of furniture and equipment (F & E) in order to set budgets (see Section 3).

Loose Furniture

A/1.1 Most loose furniture, despite the seemingly wide choice available, is based on the principle that:

- it is simple in construction (to keep down costs and make maintenance easier);
- it is based on a standard range of plan sizes[1], so that items are compatible and do not waste space (see Section A/2).

A/1.2 Loose furniture may be divided into four categories:

- general tables;
- specialist tables;
- seating;
- storage.

A/1.3 Fig A/1-1 (overleaf) shows the basic plan sizes of general and specialist tables and storage. The characteristics of each are summarised below.

General tables

A/1.4 General tables have a variety of frame types, each of which has advantages and disadvantages (see Fig A/1-2). The most common table has four legs. These tables may be used in general classrooms or, with a slightly higher specification, for heavy duty practical areas such as art.

A/1.5 Some table frames allow the table to be stacked because one of the legs protrudes beyond the table top. This makes it possible to clear the classroom for different activities. However, it does have the disadvantage that tables may only be grouped in a particular formation with one table offsetting another. They can also present a tripping hazard when arranged individually.

Specialist tables

A/1.6 Specialist tables[2], used mainly in practical areas, have one or more of the following features:

- robust construction;
- a variety of underframe styles;
- some method of carrying services (for this reason most specialist tables usually have an 'I' or 'C' frame shape).

---

1 As set out in BS 5873, see also para A/3.2.

2 BB81 'Design and Technology Accommodation in Secondary Schools', looks in detail at the range of tables available. See Section C/1.

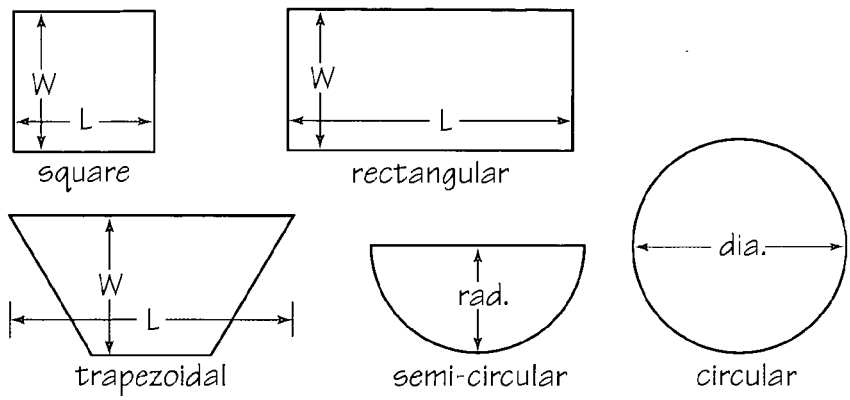

		PRIMARY		SECONDARY	
Usage	Pupils	W	L	W	L
Square					
Classroom	1	550	550	600	600
Classroom	4	900	900		
Classroom/informal area	4	1200	1200		
Rectangular					
Classroom	2	550	1100	550	1100
Classroom	2	600	1200	600	1200
Specialist (eg IT)	2	750	1200		
Specialist (eg IT)	1			750	1200
Specialist (eg IT)	1 to 2			750	1500
Specialist (eg electronics)	2			750	1800
Specialist, small groups	2 to 3			900	1800
Specialist, group gatherings	10 to 12			1200	2400
Circular					
General table, informal use	1	600dia			
General classroom table	2	900dia			
General table, informal use	2			900dia	
General classroom table	4	1200dia			
General table, informal use	3 to 4			1200dia	
Semi-circular					
General classroom table	2	550rad			
General classroom table	2	600rad			
General table, informal use	2			600rad	
Trapezoidal					
Classroom	2	550	1100		
Classroom	2	600	1200		
Classroom/informal area	1 to 2			600	1200

Fig A/1-1: Plan sizes of General and Specialist tables and their uses.

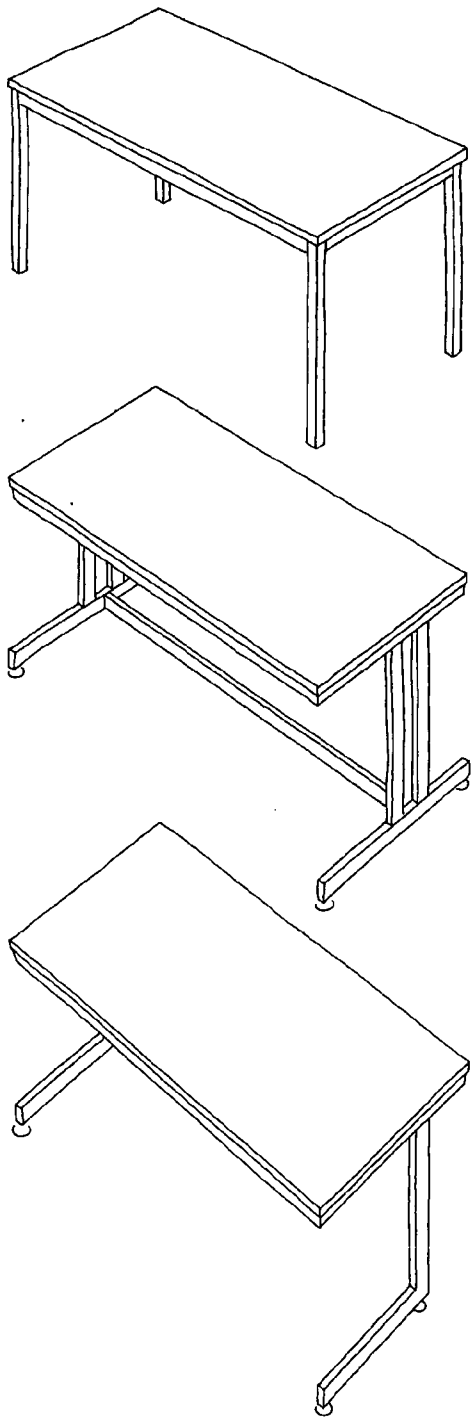

Standard four-legged frame

Pros
- most readily available
- most inexpensive
- can stack (some designs)
- pupils can sit on any side
- usually lightweight to move around

Cons
- not usually available with adjustable feet
- front legs restrict seating options when arranged in a line

'I' frame

Pros
- can be arranged in a long line with pupils positioned anywhere
- often strongly constructed

Cons
- can have some top deflection
- cannot sit at sides as floor rail restricts feet and chair positions
- often too heavy to move around easily

Cantilever 'C' frame

Pros
- can be arranged in a long line with pupils positioned anywhere
- often strongly constructed

Cons
- can have some top deflection
- cannot sit at sides as floor rail restricts feet and chair positions
- often too heavy to move around easily

Fig A/1-2: General and Specialist Table Frame Types and their Advantages and Disadvantages.

A/1.7 Some specialist tables incorporate built-in serviced trunking which carries services into the centre of the room. This removes the need to puncture the fabric of the building (illustrating that furniture can offer solutions to what at first may seem like building issues). To carry serviced outlets into the centre of the room, one of the tables will need to be plugged into a serviced outlet on the perimeter of the room. The others then plug into each other. This is known as 'daisy-chaining' (see Fig A/1-3).

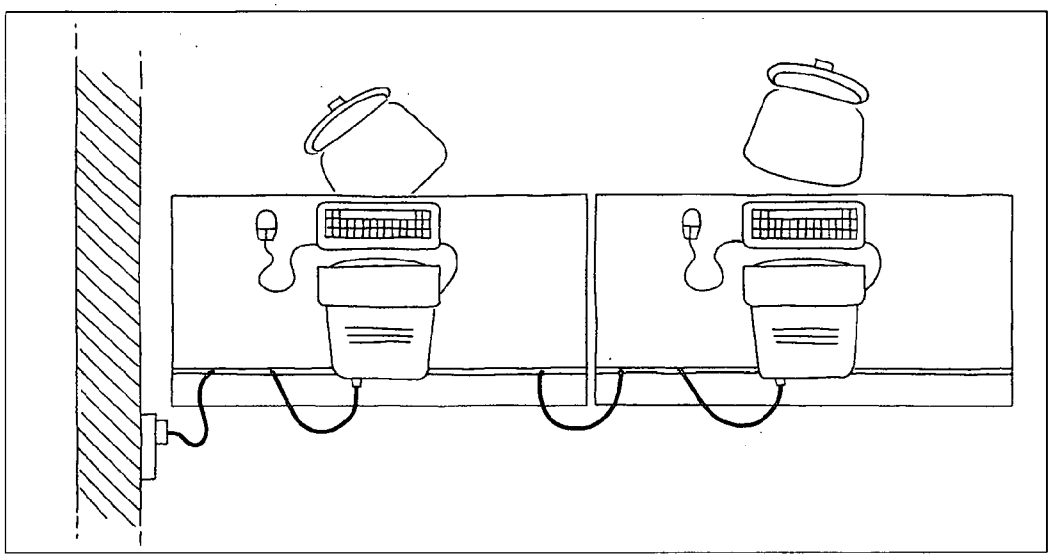

Fig A/1-3: Daisy chaining

A/1.8 Having a power supply within tables is not always necessary if the length of tabling and cable away from the wall is short (1–2 tables, around 2.4m). The power capacity of the socket outlet will however be the critical factor[3]. In this situation, tables which merely carry and organise the services, usually in a tray situated on the frame at the back of the table, may be more appropriate. This is known as 'wire-management' (see Fig A/1-4). Wire management is desirable, where possible, because it:

- avoids tripping hazards;
- avoids accidental disconnections;
- gives a classroom an organised feel;
- allows serviced tables to be used in the centre of the room.

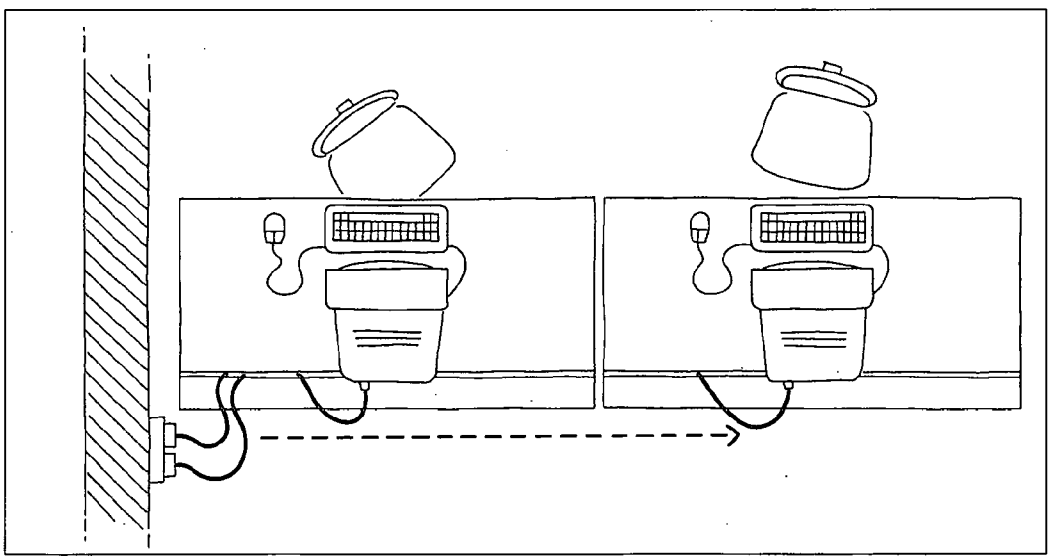

Fig A/1-4: Wire management

3 BS6396 'Specification for Electrical Systems in Office Furniture and Office Screens'. See Section C/1.

A/1.9 In both wire-managed and daisy-chained arrangements it is a requirement to either clamp the tables together or bolt them to the floor[4]. Access to services from the table top is dealt with in a variety of ways, with pros and cons for each (see Fig A/1-5 and Fig A/3-2b).

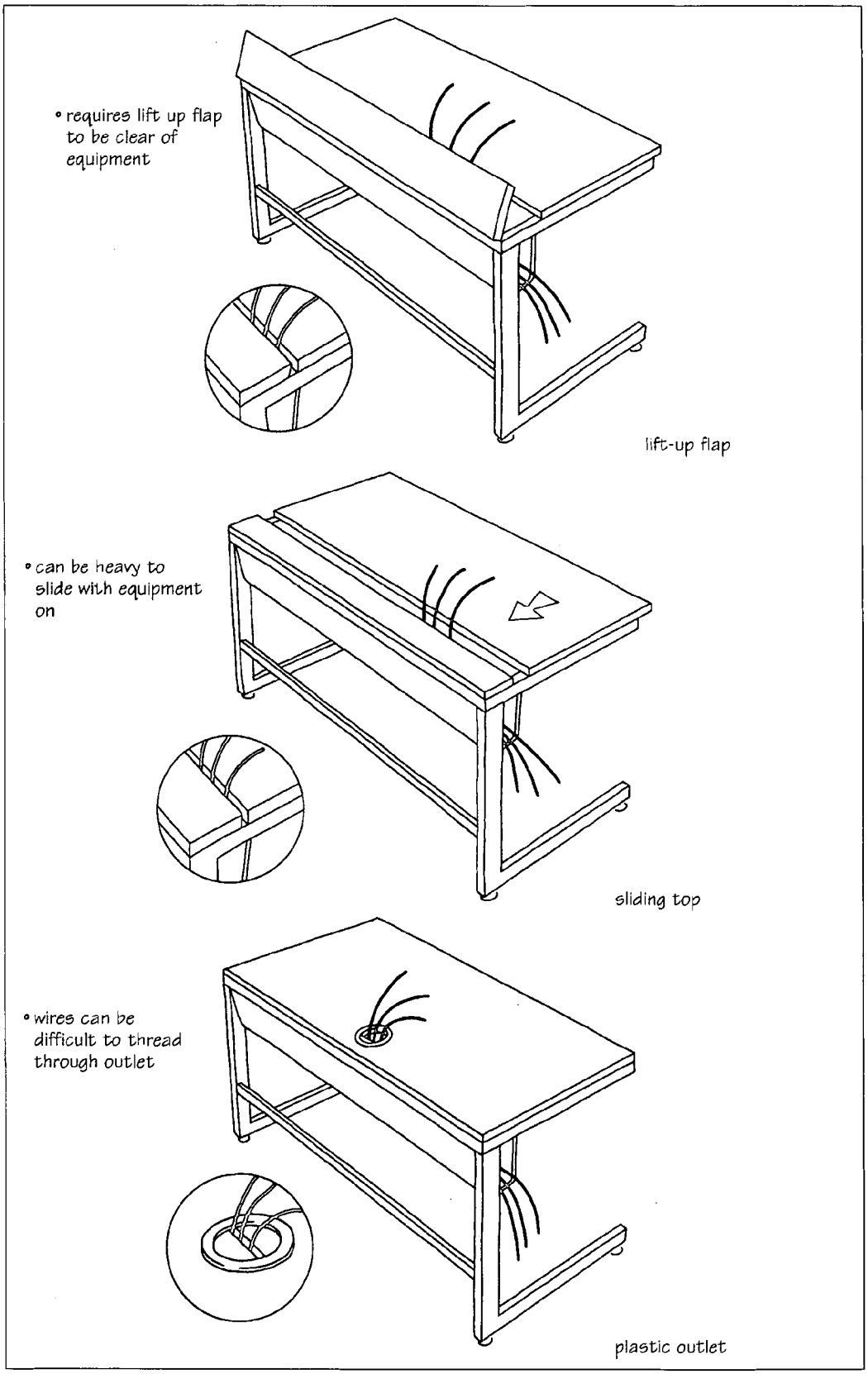

Fig A/1-5: Various Access to Services on ICT Tables

4 BS6396, as footnote 3.

A/1.10 Serviced tables can be expensive – simpler and therefore cheaper solutions may often be more effective. Contemporary office furniture is becoming simpler in its design and construction as developing technology becomes more portable and demands flexible working environments.

A/1.11 Table-top services can include a range of services sometimes such as power, low voltage and air, although these may not all be necessary. Low voltage can sometimes be achieved more cheaply with portable units (i.e. transformers) which can also reduce maintenance. Transformer units cannot provide other services, such as air and soldering iron points, however. It is important therefore to think carefully about all the types of activities which might take place on the table, both now and in the future to choose the most appropriate solution (see also paras 1.1–3).

A/1.12 Tables designed specifically for information communication technology (ICT) sometimes offer a variety of shelf attachments for carrying certain elements of ICT equipment. If a table is the size recommended in para A/2.18, there should be no need for an additional shelf unless a printer or other peripherals are also positioned on the table. Shelves can often lead to the monitor being too high in relation to the user's eye level (see Fig A/1-6).

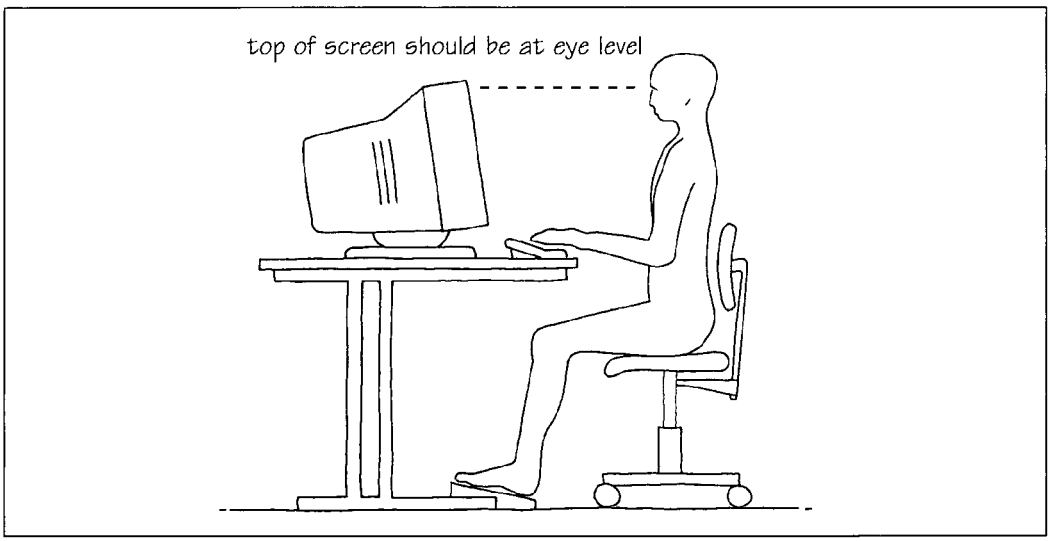

Fig A/1-6: VDU Screen Arrangement: Optimum Height

A/1.13 Tables should have rounded edges at the front to avoid damage to the back of the forearm. Pupils will undoubtedly rest their wrists on the ICT table top when using the keyboard – a padded wrist support may help to prevent wrist damage.

Seating

Polypropylene chairs

A/1.14 These chairs are usually stackable, plastic moulded chairs on a metal frame. They are the most common form of seating found in schools and are available in a variety of sizes, (see Section A/2). They are inexpensive, stackable, relatively easy to clean and lightweight, although the frames can be easily damaged through misuse (as can the metal frames of non-plastic chairs).

A/1.15 Chairs with a 'skid-base' frame (a continuous length of steel tube bent in three places to form a square shape) are considered to be the strongest as the most common form of misuse of a four-legged chair is to sit back on one leg and bend it, thus the skid base is less prone to damage. Skid-base chairs can still be damaged however if a pupil leans sideways on them. BS5873, Test Level N, should be an assurance that chairs will withstand the rigours of school use (see paras A/3.1–5 and Section C/1).

A/1.16 Polypropylene chairs are available either with a separate seat and back or formed as a single piece. Single-piece moulded chairs can sometimes be more comfortable as they have no edges to protrude into pupils' backs and yet provide sufficient flexing to allow a variety of sitting positions. This depends on the design, however, so you are advised (if possible) to try sitting on the chairs to assess comfort (see also para 2.8). You could also get your pupils to make their own assessments if a manufacturer or catalogue company brings a number of designs into the school.

A/1.17 Chairs are available in fire-retardant plastic and are therefore much slower to catch fire. However when heated above a certain temperature – likely to be achieved in a standard classroom fire where other flammable materials such as paper and wood are present – it is worth noting that the fire-retardant plastic gives off a more toxic vapour than non-retardant plastic.

A/1.18 As polypropylene chairs are relatively lightweight to stack they are often used in 'public' areas such as halls. Check with your fire officer and supplier about the need for linking mechanisms if the chairs are to be used in this way – runs of chairs beyond a certain number may have to be linked to avoid them causing obstructions in the event of a fire evacuation.

A/1.19 Some chairs contain an anti-static additive which can be of benefit in areas with a high level of electronic equipment. Check with your supplier which chairs offer this feature.

A/1.20 Polypropylene chairs can be supplied with seat pads (in fabric or plastic finish) which make them more comfortable. The pads are an inexpensive way of improving the specification of a standard classroom chair – particularly useful in areas such as the library or sixth form common room. A comfortable seat can aid concentration and you may feel the extra expenditure is worthwhile.

Wooden chairs

A/1.21 These chairs are occasionally used for their hard wearing properties and the formal feel they give to a classroom. They are generally more expensive than polypropylene types.

VDU chairs

A/1.22 Adjustable height chairs for use with ICT equipment (usually with a gas lift) are generally considered to be reasonable provision in schools. The chairs can provide:

- adjustable height, which ensures that a pupil's eye-line is in the correct position in relation to the VDU – around the top of the VDU (see Fig A/1-6) so that users have a downward visual angle of around 15°, and that their wrists rest comfortably on the worktop. Check with the manufacturer for compliance with the British Standard for gas lifts (see Section C/1 for further information);
- castors, although this is not strictly necessary unless the computer is a wheeled resource (more likely in primary schools)[5];
- a swivel action seat – an advantage in areas where ICT is placed along the perimeter of the room only and pupils may need to turn easily to face the centre of the room for occasional class discussions or directions from the teacher;
- full adjustability (i.e. seat and back), although this is not generally felt necessary as such chairs take longer to adjust and are often more expensive.

A/1.23 Primary schools are increasingly using adjustable VDU chairs. However, chairs with a gas lift are proving difficult to manufacturer for young children as the standard mechanism is designed for adult weights. This means that children of primary school age are not generally heavy enough to adjust the seat downwards. A screw-thread device for changing the seat height is presently the most readily available option but this takes considerably longer to adjust than a gas lift mechanism. Check with manufacturers for developments in this area.

A/1.24 In secondary schools the more readily available adult VDU chair may be used. However, particularly short pupils may be unable to rest their feet flat on the floor. In these cases footrests are recommended. Pupils may need encouragement to use the footrests correctly – careful management by teachers may be necessary!

Folding chairs

A/1.25 Some schools may prefer to use folding chairs in public spaces such as halls. They can allow areas to be quickly and easily cleared. This may be particularly important in primary schools where adult-sized chairs may only be used occasionally (particularly in community schools). Check that the chairs are lightweight and easy to store – some will come with their own storage trolley. Ensure, however, that they are not too lightweight and are fit for their purpose. Ask suppliers for a guarantee of compliance with the relevant British Standard (see also paras A/3.1–5 and Section C/1).

5 Castors can be mis-used by pupils who may use them for 'chariot racing' – glides may be a better alternative.

Stools

A/1.26 High stools are preferable in practical spaces where standing height worksurfaces predominate. Backless stools allow more freedom of movement for pupils and can be tucked under tables and benches more easily and safely. These stools give no postural support however which may be a problem over the course of an hour's lesson.

A/1.27 Because of their height, stools prevent feet resting flat on the floor which restricts postural changes. Stools with footrests are therefore a better option. Stools with backs and footrests must be used when ICT equipment is placed on a standing height bench, although this is not generally considered good practice. Sitting height work surfaces are much more preferable.

A/1.28 A moulded or shaped seat is usually more comfortable. Stools with metal legs are prone to similar damage to chairs with metal frames (see also para A/1.15). Wooden legs are often stronger, although this must be substantiated by the supplier. If a chair is manufactured to the relevant educational furniture standard this should be an assurance of its quality. Section A/3, gives advice on appropriate standards.

Upholstered chairs

A/1.29 These are used primarily in informal areas, such as staff rooms[6] and libraries. Chairs which are generously upholstered but are still suitable to be used at tables are often useful in areas where there is a mix of study and social activities. These chairs are often lighter than traditional easy chairs and can be moved around to change layouts. Fire retardant covers and foam fillings should be used. Information on relevant standards and ratings is available from information listed in Section C/1.

Storage

A/1.30 Storage units usually contain shelves or trays and can come with or without doors and castors. The height of the unit usually controls the number of trays/shelves it has in it. Adjustable shelves or compartments allow a variety of sizes of resources to be housed.

A/1.31 In practical areas it is space-efficient to place storage units under side benching. For flexibility, it may be worth considering mobile storage. This can then be wheeled away temporarily to allow pupils to sit at the worksurface for an occasional activity which needs a high or sturdy, fixed surface.

A/1.32 Tray units are often the best solution under side benching. The trays can be pulled out enabling resources to be viewed easily. Under-bench cupboards often remain empty because resources placed at the back are difficult to access. If tray units with doors are provided, which can be useful if security is a problem, they should be positioned so that the doors can open 270° and sit at the side of the unit out of the way of circulation routes. Check that trays are included in the price, this differs with different systems and suppliers. The cost of large numbers of trays can be substantial and to miss them out of a budget estimate could pose a significant problem.

A/1.33 Tall storage units can contain large quantities of resources in a relatively small floor area. They are particularly useful in classrooms without access to nearby storerooms. However, they are difficult to move and there can be congestion when all pupils wish to access the resources at one time. They are useful in areas such as science preparation areas and in classrooms for infrequently used resources, particularly in schools which do not have storerooms.

A/1.34 Some storage units contain drawers. These are often expensive because vulnerable drawer runners need to be of a high specification. Resources stored in them can be easily organised and readily accessed. They are particularly useful for drawings as they allow them to be stored securely and flat (A1 or A2 sized units are available and are often known as 'plan chests'). They are also useful for small components which need to be stored away hygienically and viewed easily (e.g. food room resources such as cutlery).

A/1.35 Some storage units (and tables) are modular which means that they are part of a system of furniture which interconnects. Library shelving units are a good example of modular furniture. They can stand alone or clip together to form long runs of shelving to suit different room shapes.

6 A design brief for staff rooms is available on request from the DfEE. See Section C/1 for details.

A/1.36 Storage units which are part of an integrated system are recommended. For example, trays used in a classroom cupboard should also be suitable for use in a racking system in a storeroom. This enables resources to be easily organised and transported across the whole department/suite or school. Fig A/1-7 illustrates the route a storage unit could take as it transports resources between storerooms and classrooms.

A/1.37 Trolleys may be thought of as storage items. As Fig A/1.7 shows, those which contain trays, and are compatible with other storage units, are particularly useful when transporting resources from classroom to storeroom. When planning layouts it must be remembered that a trolley wheeled from storeroom to classroom will need a 'parking' space in both rooms.

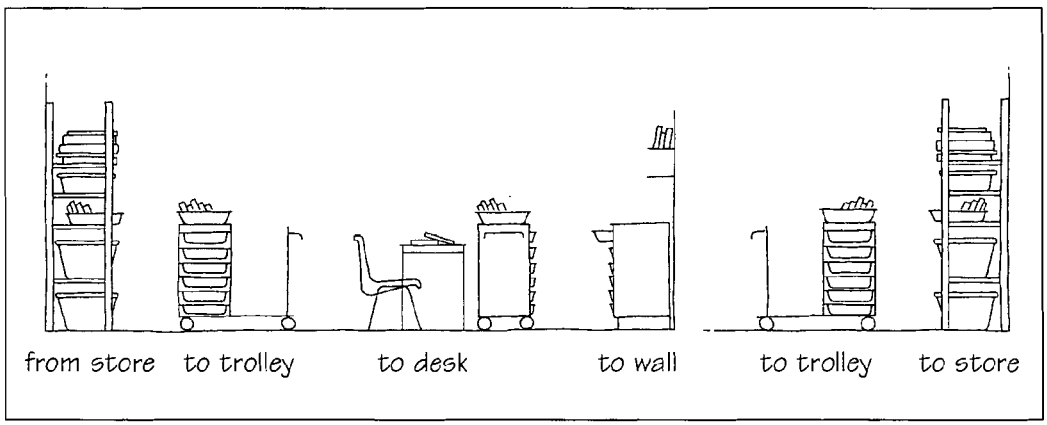

Fig A/1-7: Transportation of Resources

A/1.38 For flexibility, storerooms should contain adjustable height shelving. This is generally available either as a series of bays (usually constructed in softwood) (a) and (b) or as shelving resting on cantilevered brackets (c), which are, in turn, clipped into channels screwed to the wall (d)[7]. The channels can also hang from a continuous wall mounted shaped metal section (rather like a picture rail), although very lightweight walls may not be suitable for this system. The system can also be used in classrooms for hanging shelving, display or whiteboards. This allows the teacher to choose and change the location of resources and the teaching position, but does assume walls free of indentations and service ducts. Fig A/1-8 (overleaf) illustrates the different storage systems.

Lockers

A/1.39 Lockers are usually constructed from sheet metal. For this reason some constructions may be prone to vandalism through kicking. Where lockers are free-standing it may be useful to place an additional medium density fibre-board (MDF) side panel against the exposed sides for protection. The furniture standard, BS 5873 (see Section C/1) has recently added a part on locker strength and stability and you would be advised to use lockers which meet this requirement. It is often useful to purchase lockers with sloping tops to prevent pupils leaving objects on top of them. Many lockers are positioned in corridors and discarded litter could be a fire hazard in these unsupervised areas.

A/1.40 Always buy lockers with air vents incorporated, particularly if PE kits are to be stored in them. Think very carefully about the size of the locker required for each pupil – too small and they will not be used, too big and valuable space may be wasted. Pupils will inevitably gather around lockers at the same time, therefore avoid positioning banks of lockers in narrow corridors and try and divide them up into smaller manageable blocks, this will also avoid giving an institutionalised feel to your school.

A/1.41 A variety of methods for accessing the lockers, eg combination locks, keys etc are available and it may be worth discussing these with supplier(s) to ascertain which method suits your arrangements.

7 BB 81, 86 and 87 (DfEE) all evaluate storeroom storage systems, see Section C/1 for details.

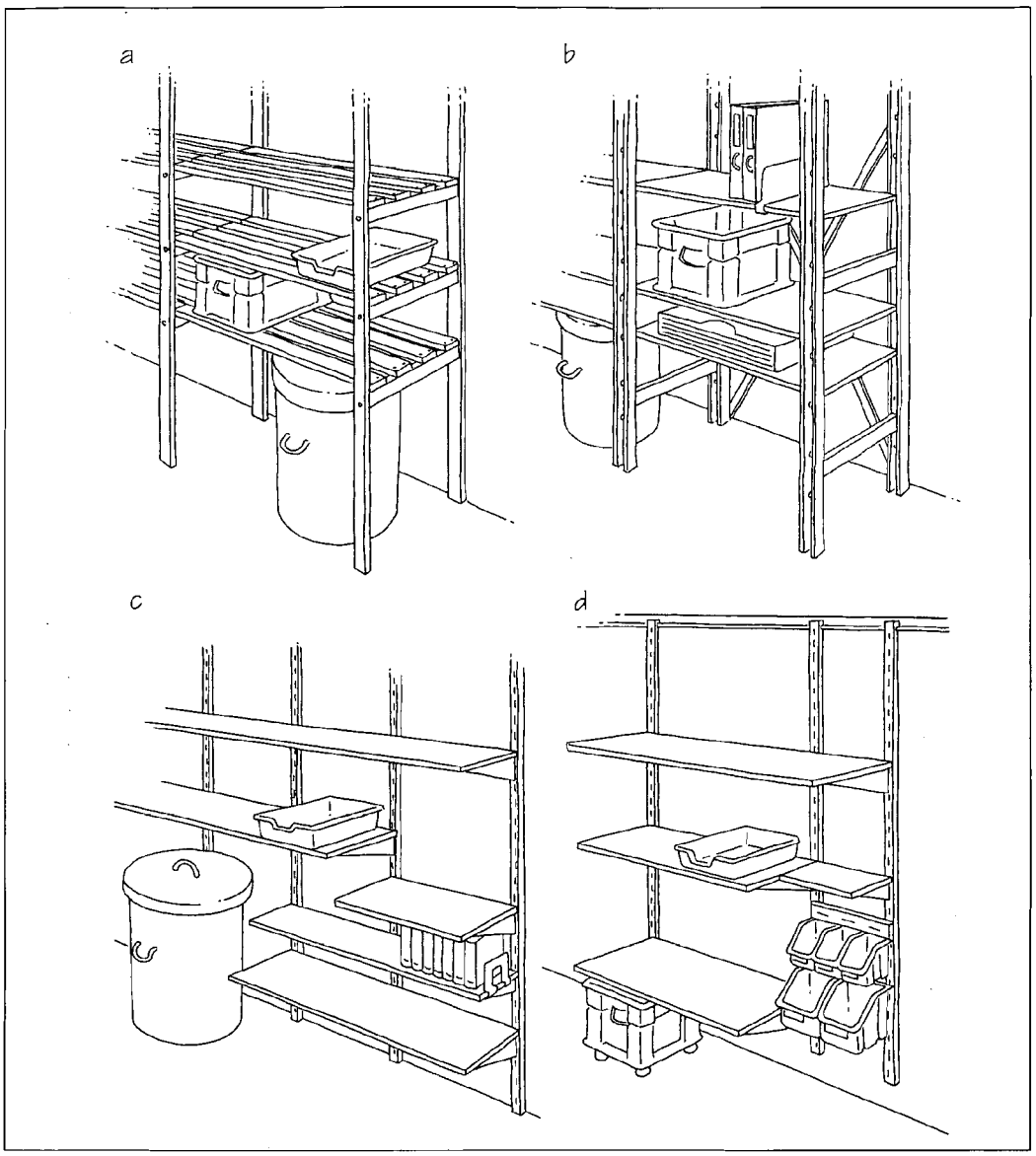

Fig A/1-8: Storage Systems Available

Fixed Furniture

A/1.42 Fixed furniture is, as the name suggests, any furniture which is fixed to the fabric of the building, such as wall benching or shelving.

A/1.43 A minimum depth for wall benching is 600mm, or 750–800mm when it houses serviced equipment such as ICT. The increased depth allows the space for services and for the keyboard to sit in front of the monitor which is necessary for comfortable working.

A/1.44 Simple wire-managed benching (see Fig A/1-9) is possible and need not be expensive. It is worth discussing this and methods for supporting and fixing benching (some more adaptable than others) with a furniture manufacturer or builder.

A/1.45 Fixed benching is generally a permanent installation. It dictates the way the room will work (e.g. where practical activities take place, etc). Well thought-out layouts are therefore necessary before fitting out rooms.

A/1.46 It can be difficult to get standard sized and shaped furniture to fit in irregularly shaped rooms. Fixed, 'made-to-measure' benching can be the most efficient way of providing the maximum amount of worksurface.

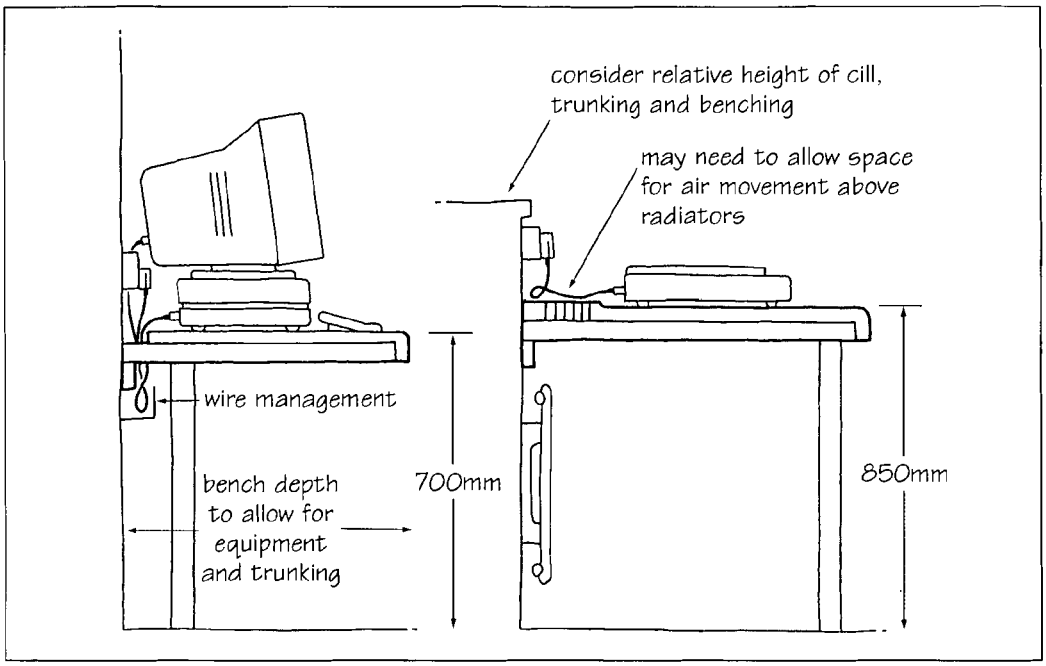

Fig A/1-9: Simple wire managed benching

Specialist Furniture

A/1.47 Most specialist furniture is fixed and provided in practical areas[8]. It is usually heavily serviced and often has to be planned and installed to specific room requirements. As such, it is generally a big investment so it is worth making a careful choice of the system most relevant to the needs of both the curriculum and the building.

A/1.48 Science laboratory systems are the most obvious example of specialist furniture, with a wide range available. Food rooms also use specialist furniture systems as they need to be highly serviced, efficient, hygienic and carefully planned.

A/1.49 Certain items of loose furniture, which are not necessarily part of a system, can also be classed as specialist. These include items such as multi-benches for design and technology and silk-screen printing tables for art. These items must not be overlooked at the planning stage as they are often large, expensive items which have an impact on both layout and budget.

A/1.50 Specialist storage systems may be necessary in some areas, for example, in design and technology storerooms. These systems should be strong, industrial style units which allow the bulk storage of such items as metal rod and machinery components. They may be fixed or free standing, although to improve stability, most are fixed.

A/1.51 Specialist dining furniture may be necessary in schools where the space used for dining needs to be accessed shortly before and after lunch periods. It is important to ensure that the system you choose is suitable for educational use as some systems may be too lightweight to withstand the rigours of regular school use. These systems of furniture allow the room to be cleared quickly using a variety of methods including:

- a table and several seats (either separate stools or a continuous bench) connected to a single frame which allows them to be folded in a single action and wheeled away into a storeroom;
- a table with a top which folds into a wheeled frame for easy access to a storeroom;
- a table and separate bench set with a lightweight frame which folds under the bench and table top.

8 BB 81 and 82, (DfEE) evaluate specialist furniture systems, see Section C/1 for details.

A/1.52 If the space for dining also needs to be used as a formal teaching area it may be worth using standard classroom furniture for dining. Such furniture has the advantage of being reasonably robust (use relevant standards) and also suitable for teaching activities. If you choose to use the dining systems outlined for ***occasional*** teaching activities check that the heights are suitable for desk based work (see Section A/2 'Heights'). Ask companies to bring samples (see also paras 2.8–9) for you and your staff to check/gauge:

- manoeuvrability;
- weight;
- the amount of space taken up in a storeroom;
- the amount of table area provided, particularly if you use 'airline' trays;
- hygiene issues – complicated corners, edges and even frames can trap food;
- the noise disturbance and damage to floor surfaces caused when furniture is moved;
- the ease with which pupils can leave their positions and others access them;
- the ease with which a wheelchair user could access the table and dine alongside other children.

A/1.53 If you are unsure how a system will work in the space ask your potential supplier to draw a quick layout to check the number of pupils who can sit ***comfortably*** in the dining area at any one time (see also para 5.41). Pupil 'throughput' for dining is often dependent not just on the amount of space available but on the furniture provided.

Whiteboards, Rollerboards, Display boards and Floor Standing Screens

Whiteboards

A/1.54 These are available in a variety of sizes, with a standard height generally of 1200mm. Whiteboards usually consist of an enamelled steel or laminated board within an aluminium frame. The following special features are available:

- a magnetic surface;
- lines, grids or music staves printed on the surface;
- boards designed to be used with a continuous 'picture rail' system (see also para A/1.38) – a double sided board may be a wise investment as the loose board can be lifted easily and turned over.

A/1.55 Some whiteboard finish will eventually wear out and the marker pens used on it cause staining, particularly the less expensive laminate boards. Ask your supplier to give you an assessment of the expected life span of the boards to fully assess best value.

A/1.56 Whiteboards are also available as free-standing units, mounted on a mobile frame. These are useful in smaller teaching rooms where wall and floor space is limited or where teaching from a board is rarely carried out. These can be cumbersome and may be a tripping hazard unless the room is carefully managed and the boards are stored away directly after use.

Interactive whiteboards

A/1.57 These boards work directly from a computer, reflecting what is on the screen via a projector. Teachers can design their own interactive lessons including access to the Internet. Using an electronic pen, information, questions and answers can be accessed exactly as they would be on a desk-top computer. Some interactive screens can also be used with marker pens. Where this is not the case, an additional standard whiteboard will be needed. Cables from the computer, the projector and the whiteboard are inevitable (until wireless technology becomes widespread) and this must be considered when planning the teaching point in a classroom layout. Ensure that back-up for this new technology is available and that individual components (e.g. projector bulbs) as well as the whole system are guaranteed and/or budgetted for for a number of years. Some of the issues associated with these boards are outlined in Case Study B/3.

Chalkboards

A/1.58 These are still used in schools but some may create dust, which can be a problem in areas with a lot of electronic equipment. The dust from chalkboards when they are wiped clean may possibly cause breathing problems with certain individuals. You should check with your supplier for verification of this. Like whiteboards, chalkboards are also available on castors. However, be wary of using them as room dividers for which they appear to be ideal. The board will often be the place from which a teacher will teach and is therefore the most likely area to disturb the adjacent space.

Rollerboards

A/1.59 As the name suggests, rollerboards have a continuous writing surface mounted on a roller. They are available with a series of chalkboard panels but can also sometimes be purchased with a whiteboard surface. They allow both sides of the board to be used and are particularly useful when a teacher wants to 'hide' or 'save' a solution to a problem set for pupils during a lesson. They are also useful for teaching in spaces with poor visibility as work can be written at a lower level (an advantage for shorter teachers) and then raised to the top of the board for viewing.

Display boards

A/1.60 These boards generally come in the same sizes as whiteboards and are also contained within an aluminium frame. They are usually made from a fibre-board core and are finished in either a hessian fabric or looped nylon (looped nylon has a 'gripping' quality which removes the need for pins which may be a safety consideration in unsupervised areas).

A/1.61 A less expensive option is an unframed board. Although less robust it could either be cut to order or on site during fitting – lightweight board may need several fixing points to prevent it bowing in the middle, which could be restrictive for certain displays. The unframed board could be covered in hessian or the board merely stained a particular colour. Most boards with a cover to a core material will be damaged by staple guns. Unframed hessian covered board is vulnerable to damage at the edges and this must be carefully managed. The best solution is for the board to run from wall to wall with none of the edges exposed. Be aware that some loosely packed composite board is often not dense enough to 'grip' material heavier than a single sheet of paper.

A/1.62 Display board and the items on the board can constitute a fire hazard. To lessen this danger it is useful (where budgets allow) to purchase board with a certified fire retardant finish. This applies not only to the surface finish of the display board but also to the core material. To comply with Building Regulations, fire retardant display board or more preferably, board covered in a protective fire-proof screen (e.g. glass), is essential in escape corridors. References on this issue are given in Section C/1.

Floor-standing screens

A/1.63 These screens come in similar sizes to whiteboards and display boards. They can often serve both as a means of dividing space and as display surface.

A/1.64 Screens are particularly useful:

- in large areas which need to be divided up temporarily;
- in areas where small study areas are required, such as sixth form study areas, libraries and business/ICT spaces where an office-type environment may be desirable;
- to display work for examinations, particularly in art.

A/1.65 Screens used for space division are normally sited side by side, with the option of varying the angles. The ways in which the screens connect are varied and some systems are more effective than others. It is important that the chosen system can be assembled and re-assembled quickly but the system must also be stable as the screens can be very heavy.

A/1.66 Where screens are intended for use in classrooms or circulation areas it is important to ensure that the feet are not a tripping hazard. This is particularly the case with individual free-standing screens which do not rely on adjacent screens for stability.

A/1.67 Screens are generally available in the same finishes as display boards and should be fire retardant and preferably anti-static, particularly when used near ICT equipment.

SECTION A/2: SIZES AND ERGONOMICS

This section looks briefly at ergonomics and the importance of purchasing appropriately sized furniture. Inappropriately sized furniture can affect the comfort and concentration of pupils and lead to back and neck pain in later life. Ergonomics is the study of the environment in which people work and live and the equipment with which people interact. It is concerned with people's well-being, both physical and psychological, and with their safety and comfort. It is a complex issue and this section deals only with the main factors. Sufficient leg clearance under tables, adjustable chairs for VDUs, the design of table underframes and the position of emergency stop switches on machines[1] are just some of the ergonomic considerations when choosing furniture and equipment (F & E)[2] for a school. For more detailed advice on issues raised in the following section contact the professional bodies listed in Appendix C.

Heights

A/2.1 The height of a work surface is an important ergonomic consideration which also has safety implications. A bench which is too high in a science laboratory, for example, may prevent a pupil from fully seeing a bunsen burner in use. Think carefully about the activities that will be carried out on the worksurface to determine what height is appropriate.

A/2.2 Worksurfaces can either be at sitting or standing heights. Standing height worksurfaces can vary further depending on the activity carried out. For example, activities which require a downward force, such as sanding wood or kneading clay, should be at a slightly lower height than fine activities, such as cake decorating.

A/2.3 Fig A/2-1 gives recommended heights and uses of benching, shelving and coat pegs based on a pupil's stature. These dimensions are then cross-referenced to average ages making it easier to pick out the relevant furniture size (see also para A/3.7).

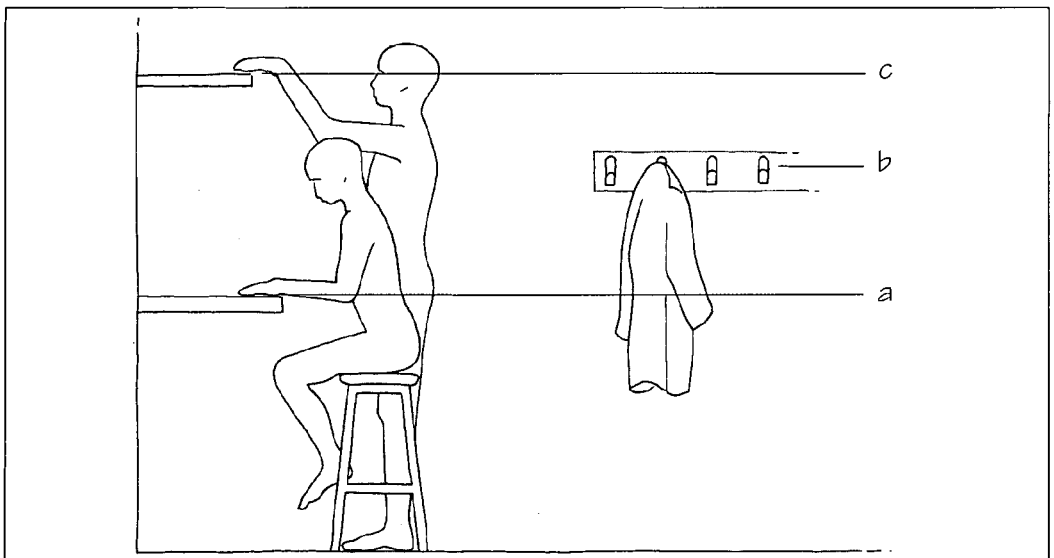

AGE	3 - 4	5 - 7	8 - 11	8 - 12	9 - 13	11 - 14	14 - 16	11 - 16	16 - 18	11 - 18
a	555	625	730	730	755	825	830	825	870	825
b	820	920	1095	1095	1135	1275	1385	1230	1450	1230
c	1005	1195	1355	1415	1465	1515	1675	1635	1715	1635

Fig A/2-1: Recommended Heights of Benching, Shelving and Coat Pegs

1 British Standards (BSs) make references to optimal safe positions for switches, etc. on equipment. For information on relevant BSs see Section C/1.

2 BB80, 81, 84 and 88 (DfEE) all consider these and other ergonomic issues (see Section C/1).

A/2.4 Many ergonomists would prefer that averages were not used and that all pupils were measured individually and given their ideal furniture size. Although this idea is laudable in principle it is generally impractical. Group work (mainly in primary schools) means that pupils must share tables and in secondary schools pupils move to different rooms several times a day.

A/2.5 You should, however, look carefully at pupil/furniture fit and ensure that there are no extreme cases of pupils sitting at furniture which is too high or too low. It is important to note that it is easier for a tall child to sit on a lower chair than a small child to sit on a higher chair. If a child's feet dangle over the edge of the chair, they will be putting pressure on the backs of their thighs which can cause physical problems. Although not an ideal situation, a tall child can stretch their legs out under the table. The aim should be for all children to sit at tables which suit their physiology. If certain children in the class are particularly tall ideally their needs should be catered for. If you, as a school, feel able to manage the process it may be possible to have two sets of furniture heights in each classroom. This generally caters for most pupil sizes but must be carefully monitored to ensure the right child sits on the correct size of furniture. This is generally easier to achieve in primary schools where children stay in one room for much of the day.

A/2.6 Some tables have trays placed under the table on runners. Whilst this may be useful, particularly in primary schools which have limited storage space for pupil's personal belongings, the tray must not reduce thigh clearance or restrict postural changes.

A/2.7 To ensure safe handling, the user should always be able to see and assess the weight of a stored item. For this reason, shelving should not be so deep or so high as to prevent this. Fig A/2-1 includes the maximum recommended child and adult heights for shelving.

Chair and Table Fit

A/2.8 Chairs and tables are designed in corresponding 'sizemarks', according to a number of standards, including British Standard 5873. The sizemarks relate to pupils' average heights and, ultimately, age (see also paras A/2.1–7). Confusion often arises when a table from one sizemark range is matched with a chair from another so it is important that you identify the individual ranges and do not mix them up.

A/2.9 Each sizemark is usually identified by a coloured rubber end cap which fits to the leg (some manufacturers choose to use transfers). This ensures that a table will correspond with the height of a chair, enable adequate thigh clearance between table and chair and ensure the correct table height – just below elbow height.

A/2.10 It is very important that the same chair and table sizemark is used together to prevent mismatch and pupil discomfort. In classrooms where two sizes of furniture are used, chairs and tables must not be mixed up.

A/2.11 In areas with fitted benches, usually practical spaces in secondary schools, check that the height of the bench, the tables and the stools are compatible. Often, standing height tables are slightly lower than side benches but the same height of stool is used at both, resulting in a mis-matching of sizes. In primary schools most side benching is set at standing height with tables at sitting height. If pupils are occasionally to sit at side benching, two types/heights of seating must be offered and the use of this furniture should be carefully managed (see also para A/2.8).

Adjustable Height Furniture

A/2.12 In the last few years there has been increasing concern about the correlation between school furniture and back pain amongst children. As a result of this concern, table and chair systems which are said to be more ergonomically considered have been brought onto the market.

A/2.13 These systems allows the chair and table height to be adjusted to suit the variable heights of children. The seat, and sometimes also the table top, slopes forwards so children do not need to bend their necks when writing, Fig A/2-2 illustrates the general principles of the systems. Tables are available for one or two pupils. By purchasing some single person tables, particularly tall or short pupils will not have to be positioned together.

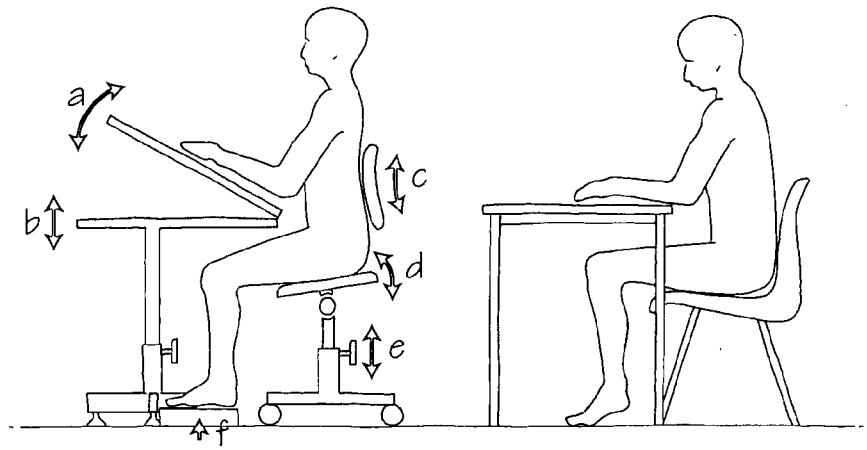

ADJUSTABLE SYSTEM Traditional arrangement

a: adjustable angle of desk to avoid pupils bending their necks
b: adjustable height of table top for varying heights of pupil
c: adjustable height on chair back to suit an individual pupil's lumbar position
d: adjustable tilt on chair seat for optimum seating position
e: adjustable height of chair to match height of desk
f: footrest for shorter pupils

Fig A/2-2: General Principles of Adjustable Height Furniture Systems

A/2.14 Research on adults in Scandinavia has shown a significant reduction in back problems amongst adults when a chair slopes forwards and the table is angled. Wide research on this subject has never been carried out on children in this country, but where this kind of furniture has been introduced pupils have reported favourably.

A/2.15 It may be useful to note several practical points about this type of furniture.

- Advantages to the adjustable system are limited when two pupils must share the same table.
- The system is largely based on school systems where the pupils stay in one classroom all day and rarely visit specialist areas. Whilst this would be acceptable in a primary school it may present problems at secondary level where pupils go to specialist areas for particular lessons.
- It is worth considering that teachers may be called upon to help adjust the furniture, at least initially, particularly given that a pupil may change classes up to eight times a day.
- Pupils will take time to adjust the furniture so in classes which may last only 35 minutes – the easier it is to adjust the better.
- Where a screw locks the furniture at the height required it should not be possible (or necessary) for a sixth form pupil to adjust the screw too tightly for a Year 7 pupil.
- Adjusting chair heights using gas lifts may be introduced in secondary school furniture, but this presents a problem in furniture for primary age children (see also para A/1.23).
- In primary schools, group work is often carried where a single piece of work or resources may be shared amongst several pupils of differing stature. Different heights of table may make this work difficult to carry out; tables which are easy to adjust however could be lowered temporarily to suit the majority of pupils.
- Some adjustable furniture systems are very high. Chairs are generally set at stool height and pupils have to rest their feet on a cross rail on the chair or table. Lower height systems allow pupils to vary their position more as their feet are resting flat on the floor (see also para A/1.27).

Plan Sizes of Furniture

A/2.16 The plan size of furniture is an ergonomic consideration which is often overlooked. Information communication technology (ICT) tables provide a good example of this need. ICT tables should have a depth of at least 750mm, to allow pupils to sit comfortably away from the screen and for the keyboard to sit in front of the visual display unit (VDU)[3]. Flat screen technology should gradually reduce this need.

A/2.17 The length of a table should also be considered. Pupils should be able to sit comfortably side by side and to be able to carry out a variety of activities on the worksurface using a range of resources.

A/2.18 ICT equipment can take up a lot of space, particularly when a pupil is using it alongside other resources such as books. A useful rule of thumb is to assume a table length of 1–1.2m for a single station with one user, 1.5m for a single station with two users and 1.8m for two stations and two users. Fig A/2-3 illustrates these sizes. A 1.5–1.8m table is useful when one pupil at a single station needs to have a variety of reference material alongside. A standard table alongside an ICT table may be all that is necessary though (see also para A/4.10).

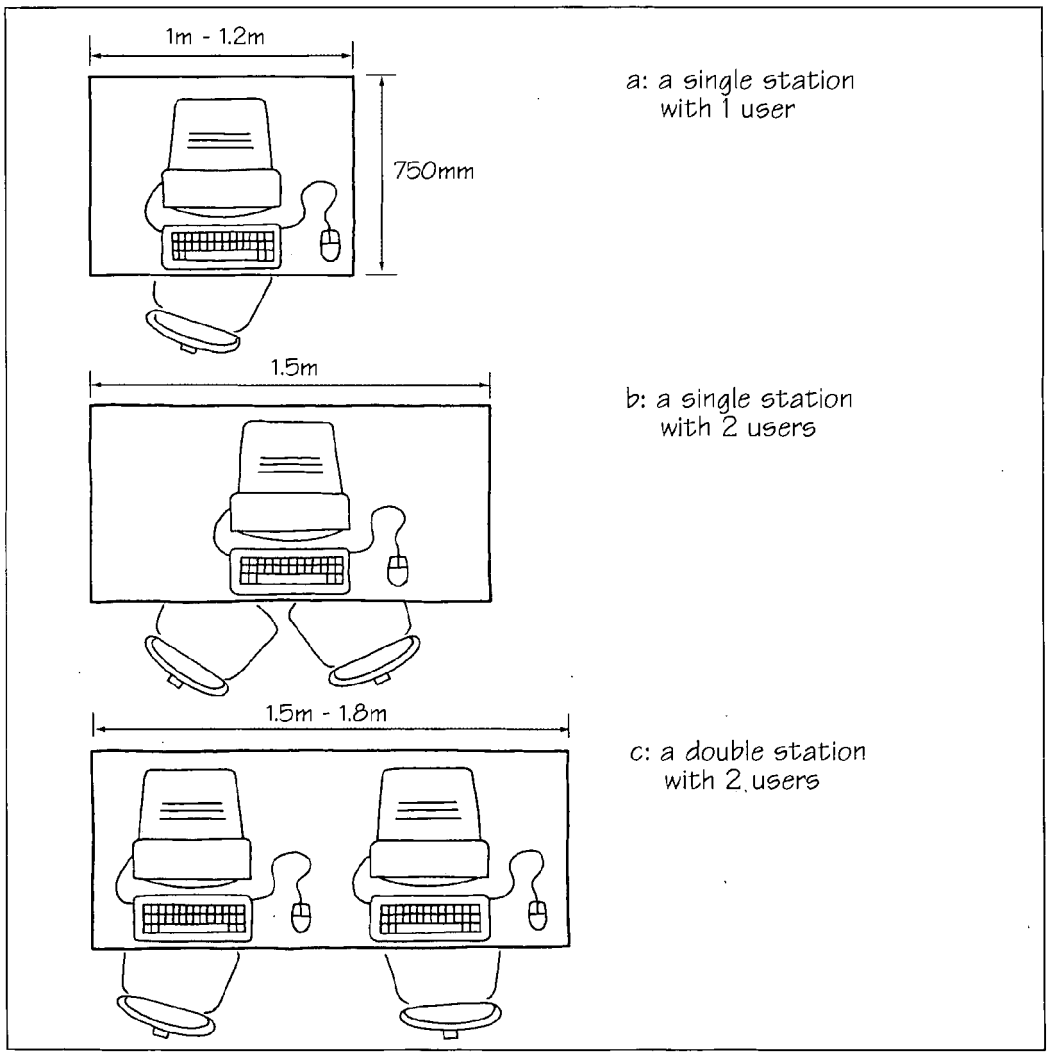

Fig A/2-3: Recommended sizes of tables for ICT use.

3 A video 'Making IT Fit' from the DfEE discusses this and other issues to do with accommodating ICT and is free to all schools (see Section C/1).

A/2.19 Trapezoidal tables may only be suitable for one pupil as they offer less table-top space than a conventional rectangular table. They are more suitable for two pupils in practical areas for example, in music[4], where brief note-taking is the only requirement (see Fig A/1-1).

A/2.20 Benching should be sufficiently shallow to allow pupils to reach the back of the bench easily to access services and machinery cut-off switches.

A/2.21 Shelving should be sufficiently shallow to allow pupils to see and access resources. The height of both worksurfaces and shelves also affects the ease of access, see Fig A/2-1.

Layout and Plan Sizes

A/2.22 Plan sizes of F & E items can have an impact on the effectiveness of both the F & E chosen and the classroom layout. For example, table sizes should be modular (most tables are based on the length being twice the depth). Fig A/2-4 illustrates the awkward group layouts which can occur when tables are not modular sizes.

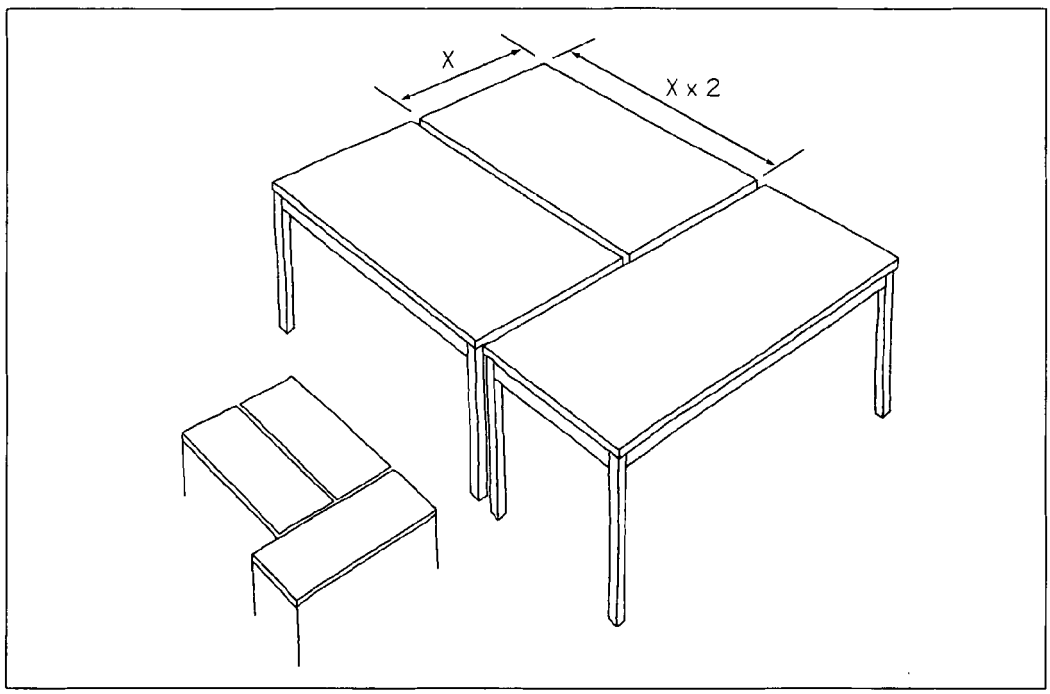

Fig A/2-4: Modular Sized Furniture

A/2.23 Think carefully about the activities taking place on tables in different classrooms. Tables which do not offer enough work-surface can limit activities and cause discomfort for pupils. Fig A/1-1, illustrates the sizes of tables generally available and their applications.

A/2.24 Two chairs should be able to sit side by side under a standard sized classroom table. Storage units should fit easily under benching without jutting out.

A/2.25 It is important that once F & E has been chosen the exact sizes are determined. This will enable them to be incorporated into an accurate and final layout to prove that they will fit in the room (see Section A/4).

4 BB86 'Music Accommodation in Secondary Schools' 1999, DfEE looks at F & E requirements (see Section C/1).

SECTION A/3: QUALITY ISSUES

When choosing furniture and equipment (F & E), quality must be a primary consideration. This Section gives details of various issues surrounding quality, including some relevant Health and Safety (H & S) legislation. It also identifies some features to look for when assessing the quality of an individual product, although it is by no means a complete list. More detailed H & S documents are listed in Appendix C which may be useful when F & E specifications are being drawn up. Check also with your supplier and Local Education Authority (LEA) for H & S information relevant to particular products.

British Standards

A/3.1 British standards (BSs) give guidelines on various products used in both public and private life. There are a number of BSs relevant to school F & E, covering construction, assembly, use and installation of these products. Appendix C lists some useful references, and the British Standards Institute (BSI) offers a list of all BSs on their website (www.bsi.com.uk). Simply type in a keyword, eg 'photocopier', and it will state the relevant BS. Schools may then look for a product with that relevant standard in order to asses quality.

A/3.2 BS5873[1] is the most relevant furniture standard for educational use and covers strength and stability of chairs, tables and storage. The standard has varying strength ratings which will be applicable to various areas (eg chairs picked for a nursery school could be constructed to a less severe rating than those for a sixth form common room)! However, if a school is used by the community then the ratings may need to be high. The British Educational Suppliers Association (BESA) have a useful website which lists the relevant BS ratings for particular situations and the furniture manufacturers who meet them (see Section C/2).

A/3.3 Purchasing furniture which meets this standard ensures that it will meet the considerable demands of the school environment and will therefore generally represent good value for money.

A/3.4 Under the Education Act of 1993 and as part of its duty to the safety of pupils, a governing body and its LEA (if applicable) must take steps to ensure that furniture is safe for its intended purpose. Purchasing furniture designed to a standard for educational use should generally be an assurance that this requirement is met. It is important to note that purchasing furniture not designed primarily for the educational market (eg for domestic use), although sometimes less expensive and offering a wider range of choice, may fail to meet a school's requirements and therefore the obligations of the governing body.

A/3.5 Manufacturers may not necessarily say in their brochures whether an F & E item is made to the relevant standard and it is therefore worth clarifying this point with them. Ask to see certificates and reports of the tests carried out if necessary. If a third party is buying the furniture then they should also be able to produce valid test certificates.

Other F & E Standards

International and European Standards

A/3.6 It is intended that European or International standards will eventually replace most British Standards. When a European or International committee is formed a new British Standard covering the same subject cannot be introduced or existing ones modified. It is intended that where possible, International Standards will be the most widely produced. A European standard will be developed where there is little interest beyond the European community.

A/3.7 A European standard is currently being written to replace BS5873 but not due for completion until at least 2001. This will issue guidance on updated table and chair heights and it is for this reason that Fig A/2-1 does not make reference to them.

1 BS5873 'Educational Furniture', BSI, 1980 (see also Section C/1).

Kite marking

A/3.8 The Kitemark is a product certification mark acknowledging manufacturing quality and fitness for purpose. In order to be awarded the Kitemark a product has to be tested and conform to an acknowledged specification. The Kite mark is a distinctive trademark which offers reassurance of quality to the purchaser. It is awarded by the British Standards Institute (BSI) via a licence and is reviewed regularly throughout the year.

A/3.9 Local Authority trading standards officers could investigate the Kitemark (or products claiming to meet British Standards) if a faulty product with the award was brought to their attention.

Certificat European (CE) Marking

A/3.10 CE marking is a way of standardising specified manufactured products. It is an acknowledgement of manufacturing quality based on the minimum requirements of various European directives. The legislation requires manufacturers of certain products to display CE marking on their products (all toys must have the CE marking). It is self-certified by the manufacturer of the product, which, should that product fail to meet a high quality (ie it breaks) the manufacturer could be in breach of its claim and prosecuted. CE markings are overseen by, amongst others BSI, and offer assurance of quality to the purchaser.

ISO 9000

A/3.11 ISO 9000 is a standard awarded to companies which follow a clearly identified quality management system. Using a company with this standard should ensure that the product they supply is manufactured efficiently and to a consistent standard in accordance with the purchase agreement, although it does not necessarily guarantee quality. Put simply, this ensures that if you order a 30mm solid beech worktop, you will get a 30mm solid beech worktop. It is worth ascertaining therefore, whether a company has this standard.

Health and Safety at Work Act (HSWA)

A/3.12 The Health and Safety Executive give the following definition and background information to this Act. HSWA is an enabling Act designed to secure the health, safety and welfare of people at work. However it is also designed to protect others from risks brought about by work related activities – and pupils are classed within this. There have been many regulations brought about by the HSWA, some of which relate to European Directives.

A/3.13 Pupils *are* covered by the *requirements* of the Act – the confusion lies in the fact that many of the individual *regulations* associated with the Act do not apply to pupils. In order to ensure the health and safety of the person other than the employee, ie the pupil (essentially the basis of the Act) a risk assessment should be made of all the activities the pupils carry out. The risk assessment could be based on the same principles as the regulations set out in the HSWA. For example, under the Personal Protective Equipment at Work Regulations protective equipment would be required during potentially hazardous activities (see also Section C/1). Although a pupil is not strictly covered by this requirement it could be argued that, in order to pass the risk assessment for these regulations, a pupil doing a particular experiment in a science laboratory should wear eye protection.

A/3.14 There are a number of useful organisations which give guidelines on risk assessment, such as BSI, the Consortium of Local Education Authorities for the Provision of Science Services (CLEAPSS) and your LEA. Appendix C gives details of some of these organisations and relevant documents, although it is not intended to serve as a complete list. Specific safety advice must be sought from various professionals in this field.

A/3.15 As part of the HSWA schools must have a clearly stated policy on health and safety. In Community and Voluntary Controlled schools the employer is the LEA and the Health and Safety policy must be generated by them, although some responsibility will undoubtedly be devolved to the school and its governors. In Voluntary Aided and Foundation schools the governing body is the employer and therefore has the responsibility to produce a health and safety policy.

Worksurface Finishes for F & E

A/3.16 Various finishes are available for worksurfaces on furniture, offering varying degrees of protection against accidental and deliberate damage[2]. When choosing a finish the activity taking place in the room should be carefully considered. An assessment of the likelihood of damage and an estimation of maintenance costs may also be useful. Manufacturers should ideally allow a school to try out samples of worksurface finishes over a period of time. The most typical worksurface finishes are described below.

Plastic Laminate

A/3.17 This comprises a sheet of thin plastic glued over a manufactured board core – usually chipboard or medium density fibreboard (MDF) and it has the following characteristics:

- it is suitable for general classroom use;
- laminate (even at the thickest gauge) can be damaged in heavy duty areas such as design and technology;
- laminates are often damaged because the core material is not dense enough and splinters beneath the plastic top (particularly on post formed edges). Chipboard is by nature less dense than MDF and more susceptible to cracking;
- it is available in a wide range of colours and patterns;
- it will generally give sufficient heat resistance for most teaching spaces, including most practical areas;
- it will require some form of edging treatment (see 'Edging Materials for F & E').

Solid Laminate

A/3.18 Layers of laminate are glued together under high pressure to form a solid piece making it denser than a single piece glued to core material and therefore less likely to 'crumble' under the top sheet. It has the following characteristics:

- in all but special grades the surface has exactly the same properties as the plastic laminate;
- above manufacturers' minimum quantity it is available in the same colours as plastic laminate, below this quantity manufacturers will usually only supply from their stock range;
- it is generally more expensive than a single sheet of laminated board but can be comparable overall as it needn't be glued to a board or its edges finished beyond sanding and smoothing;
- it can be cut into complicated shapes without difficult edging treatment;
- It is excellent for benching where sink cut-outs and drainage grooves are required as it is impervious to water;
- worktop edges can be profiled to any shape required.

Wood Veneer

A/3.19 Wood veneer has the following characteristics:

- it has the same application method as is used for plastic laminate but with a thin layer of wood;
- it is suitable for general classroom use although it is more susceptible to damage than plastic laminate;
- it is more expensive than plastic laminate and must be varnished to protect it from water penetration.

Solid Wood

A/3.20 This is found mainly in science laboratories and design and technology rooms for its hard wearing properties and its resistance to heat and chemicals. It has the following characteristics:

- surface damage such as vandalism can be sanded off and re-sealed giving it a longer life span than other materials;

2 BB80 and 81 analyse the suitability of finishes in science and design and technology respectively (CLEAPSS also produce guidance on this issue, see Section C/1).

- hardwoods are sometimes used but surfaces are now increasingly being manufactured from small, more sustainable pieces glued together. This minimises waste and utilises timber produced form less mature trees, although the environmental effects of using formaldehyde glue raises its own controversies.

Resin Compounds (polyester/acrylic)

A/3.21 These materials are found in laboratories and food rooms where resistance to heat and chemicals is important. They have the following characteristics:

- complex shapes can be fabricated as single pieces giving an attractive seamless look to a run of furniture units, which is easily cleaned;
- these materials are hard-wearing but can stain badly with certain chemicals if not cleaned immediately. Surface staining can be sanded and re-filled using a two-part mix although this requires a good deal of skill to achieve an invisible repair;
- all finishes come in various colours and patterns;
- surface finish can have both a significant visual and financial impact on an area which uses a large amount of furniture, eg laboratories; certain finishes can sometimes double the overall furniture cost;
- it is particularly useful in food rooms where high standards of hygiene are demanded;
- it is useful in laboratories where it displays similar resistance to chemical attack and staining to plastic and solid laminates;
- overall cost is less favourable when compared with plastic and solid laminate. However new manufacturing techniques such as laminating and spray moulding are being developed which should make it more affordable;
- the surface finish, whilst relatively limited in choice, is designed to provide maximum visual impact.

Stainless Steel

A/3.22 This is often used in kitchens and increasingly in food teaching rooms as it is easy to clean and is impervious to water. Heavy steel benches are popular in design technology workshops as they are sturdy and hard wearing.

Edging Materials for Furniture

A/3.23 Various finishes are available for edgings of table and storage tops with different forms of application. The following materials are readily available for tops made of MDF or chipboard, Figs A/3-1 a, b, c and d illustrates the principles outlined:

- the core material itself may form the edge, but it must be properly sealed to protect it from knocks, scratches and water penetration. This works best with an MDF core particularly if it is bullnosed (a);

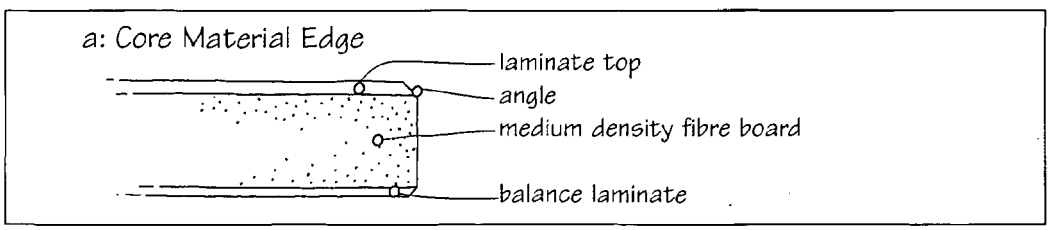

Fig A/3-1a: Core Material Edge

- a strip of plastic or wood veneer can be glued directly onto the edge of the core material. This can peel off eventually but is further protected if the laminate protrudes over the top (b), this edging material is generally unsuitable for most classroom environments however;

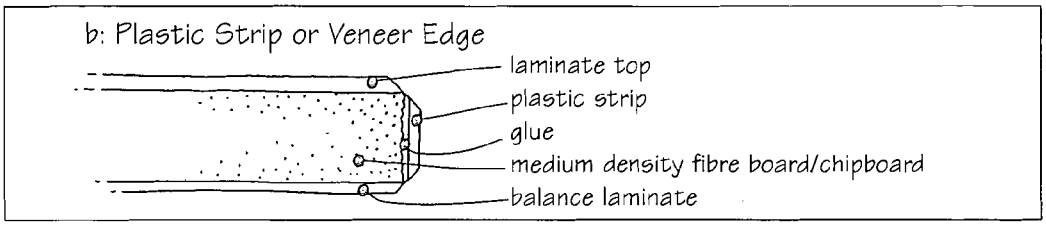

Fig A/3-1b: Plastic Strip or Veneer Edge

- a 'T' shaped piece of plastic may be inserted into a slit cut into the core material making the bond stronger (c), dirt can however gather under the edge;
- a PVC edging strip applied under pressure is one of the most firmly applied, common edges, and generally provides protection against damage from adjacent furniture;

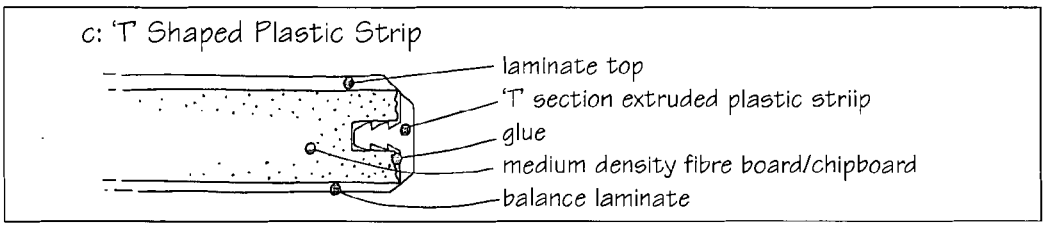

Fig A/3-1c: 'T' Shaped Plastic Strip

- a piece of solid wood gives excellent edge protection to a table, however laminate tops should ideally sit over the wood to 'seal' the wood to the core material and protect it from becoming detached (d);

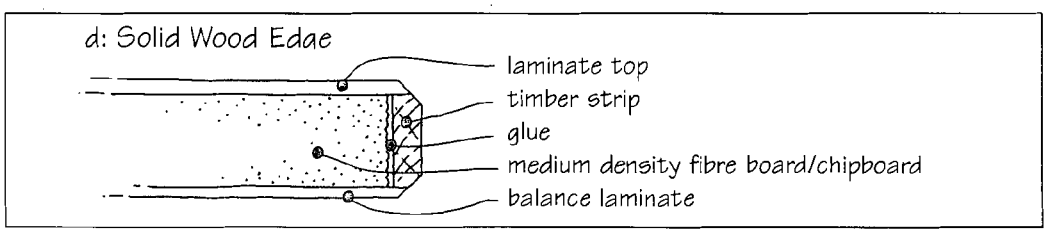

Fig A/3-1d: Solid Wood Edge

A/3.24 Some tables are now available with a moulded polyurethane edge, this effectively forms an integral table top and edge and gives excellent resistance to damage. As it is formed by a mould (which is expensive to construct) table sizes are limited.

Construction

A/3.25 Provided that an item of school furniture is manufactured to BS5873 it may be assumed that it is constructed to an appropriate standard. Figs A/3-2 a, b and c (overleaf) illustrate some useful things to note when looking at items of furniture, not all of which are covered by BS5873. All these points must be clarified on products which are not manufactured to BS5873.

A/3.26 Check with the manufacturer for assurance that a product is robust enough for school use. Check also the length of guarantees – generally the longer the guarantee the more confident the manufacturer is about the product.

A/3.27 Ask manufacturers/suppliers if they offer an after-care service. Although there may be a charge for this it could be considered value for money (see also para A/3.31–32) in certain circumstances, ie in furniture with several component parts such as computer tables.

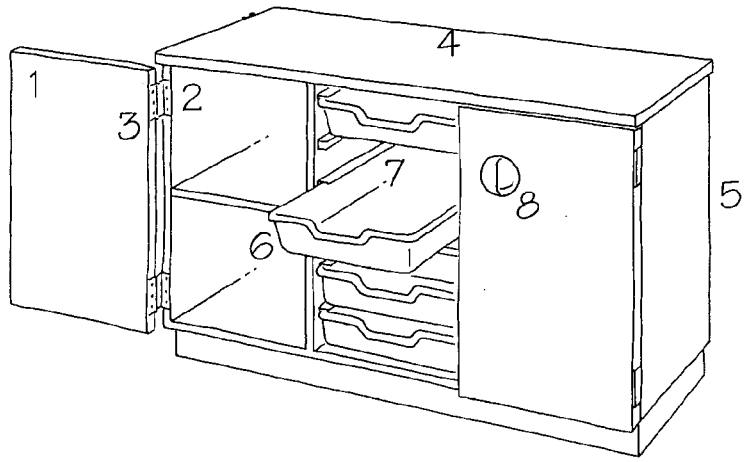

1. check that the edges to cupboard doors used in practical areas have been properly sealed and protected to prevent water ingress - horizontal door edges are particularly vulnerable;
2. ensure that the hinges on cupboard doors are strong enough, particularly on floor standing units where pupils may sit on the top of the opened door;
3. hinges which allow cupboard doors to swing 180° or beyond are preferable as these will not cause obstruction. Hinges which open less than 180° can protrude into circulation routes which could cause accidents;
4. check how robust the surface finish is and the edging of a storage unit top. This can be just as prone to damage as a table in areas where storage is moved around and used as display or work surface;
5. check how storage carcasses are constructed, some manufacturers glue and screw the carcass while others use visible knock down fittings, check the strength of these;
6. check how plastic trays run inside cabinets - some methods are better than others. Runners with a lipping top and bottom capture the tray more securely and prevent the tray tipping up and off the runner when pulled out beyond a certain point;
7. generally, the stronger and more firmly applied a tray runner is the less it is likely that the trays will slip off when carrying heavy loads;
8. check how handles are applied to cupboard doors, flush handles mean that pupils cannot knock into them, a problem particularly for low floor based units;

Fig A/3-2a: Storage Unit and Associated Construction Points

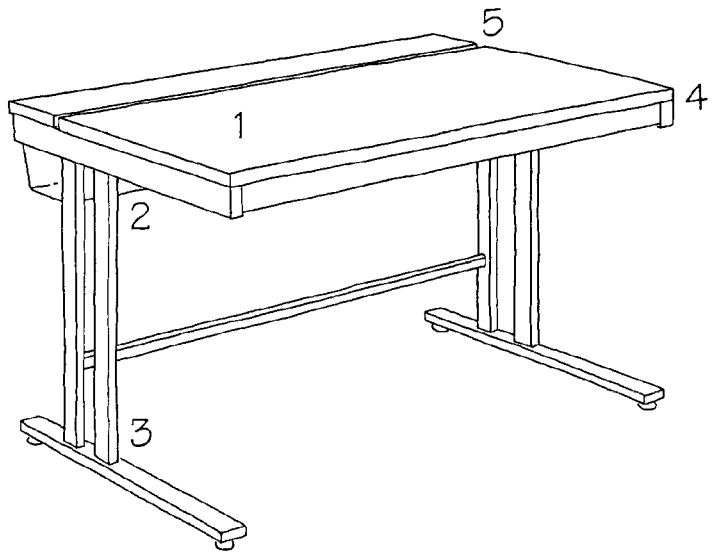

1. check how the laminate is applied to the table top. Laminates which are angled or sanded so as not to be 'proud' of the top are less likely to be picked at or chipped (see fig A/3-1a);
2. check how the table frame is constructed. Check that the rails are fully welded to the legs. If the legs and the rail are part of the same continuous piece and are bent over (known as a 'crush bend') check that the bend is not crushed so much that it is weakened. However good bends are often stronger than welded joints if a thick enough gauge of steel is used;
3. joints in metal tube which are welded all the way round are generally stronger than those welded only at intervals around the joint;
4. check how the table top is attached to the frame, if it is rectangular it should ideally have at least eight points of contact;
5. in an ICT table, how is access achieved to the services? Some systems rely on pulling the table top complete with ICT equipment towards the user. Check that the action is smooth and not problematic to teachers' backs. Some systems have a lift up flap containing services, check that the table is big enough to allow the computer to sit in front of the flap thus avoiding having to move it clear of the flap every time services have to be accessed (see Fig A/1-5);

Fig A/3-2b: Table and Associated Construction Points

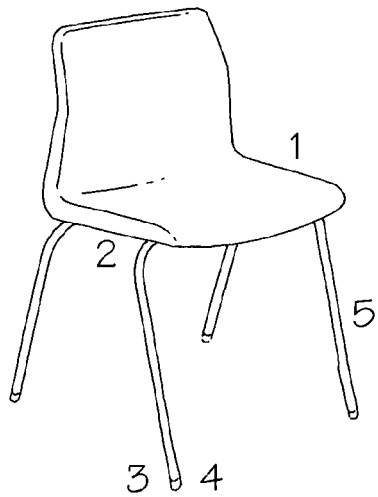

1. check how a plastic seat is attached to the chair frame, it should ideally have at least four points of contact on both the horizontal and vertical surface of the seat and back moulding, although this does depend on the design of the chair to some extent;
2. chairs with an 'A' shape frame can often be weaker than the standard four legged frame, as the chair seat is attached to the narrowest point on the frame at the top;
3. check how end caps are applied to chair and table legs. If they can be pulled out or will easily wear out then they will leave bare metal which can damage floor surfaces and be a potential danger to pupils;
4. ensure that end caps cannot be pushed up inside the leg when the chair is sat on or lifted up and dropped;
5. check with the manufacturer about the thickness of steel on chair legs, too thin (18 gauge is thinner than 16 gauge) and the chair will be unable to support the user.

Fig A/3-2c: Chair and Associated Construction Points

A/3.28 It is a schools responsibility to use a product for the purpose it was intended for. If it can be proven that the failed furniture had been used in an incorrect way then a dispute about fitness for purpose could occur.

Maintenance

A/3.29 Schools may wish to maintain some of their F & E themselves. The refurbishment of certain finishes can be particularly useful as it is relatively quick to carry out and can have an instantly uplifting effect (see also paras 1.14–16). Maintaining F & E can also include the replacement of new tops on workbenches, re-assembling broken cupboard carcasses or doing minor work on workshop machinery. It must be borne in mind however, that schools which carry out maintenance work on F & E could be legally liable to damage claims from users should the repaired product fail.

A/3.30 Some manufacturers offer guarantees and after-care services on products. F & E should last between 5 and 25 years depending on the product, it is worth asking a manufacturer what they think their product's life-span should be and, if necessary get this in writing. Forecasted maintenance costs could then be built into the school facilities development plan (see also para 3.1).

A/3.31 It may be worth asking manufacturers if they sell components for F & E separately, for example some manufacturers sell replacement tops for tables as they are more likely to suffer damage than their metal frames. The availability of replacement parts may reduce the need to buy a complete new item in the future thus may making the products better value for money. The simpler an item of F & E is, the fewer components need to be replaced (see also para 1.8).

Role of Quality Within Value for Money (VFM)

A/3.32 Value for Money is about quality as much as cost. In order to achieve VFM a school should at least be assured that an F & E item is safe, durable, fit for purpose and will meet it's needs.

A/3.33 In order to be totally assured of VFM (or Best Value) a school should ideally draw up its own list of requirements and then achieve the lowest price based on those criteria (ie tendering). Section 4 looks in detail at ways of achieving VFM and attempts to explain the purchasing process. The points outlined in previous sections could be used to draw up some of the criteria but there will undoubtedly be requirements specific to the project or to the school itself. VFM may therefore not necessarily be the cheapest item available, merely that it is felt to be an appropriate price for the appropriate product.

SECTION A/4: LAYOUT ISSUES

In a capital project there will be a direct relationship between the building and the layout of furniture and equipment (F & E). The importance of the layout exercise should not be underestimated. This section aims to identify the process needed to achieve a layout which is a useful and accurate reflection of your school's needs. Section 1 discussed initial layouts as a way of establishing immediate needs. The following points may be followed for an initial rough sketch or, more importantly, as a part of the detailed design stage in a capital project.

A/4.1 A layout is a plan view of a room with the proposed position of F & E shown. It is the clearest initial illustration of how the F & E will sit within the room and add to its effectiveness.

A/4.2 Once your curriculum requirements have been analysed (see also paras 1.1–3) F & E can be identified and incorporated into a layout. The size and shape of the room can then be properly decided. If the project involves the refurbishment of an existing room, it is important to prove that the F & E identified will fit into that room.

A/4.3 It is important that all teaching staff are consulted about their teaching requirements and their F & E needs. A teacher who has to teach every day in a room he or she has had little influence over can be an unhappy teacher.

A/4.4 Your local education authority (LEA) will probably be able to advise on F & E and layouts. In some Authorities advisory teachers can be brought in to give specialist advice (see Section 5 'Architects and Consultants'). This is particularly useful in areas such as design and technology and science, where a lot of activities will be taking place at one time, many of which have Health and Safety implications (see also para A/4.8). Suppliers can also provide layouts as part of their initial discussions with you and as part of the tendering exercise (see also para 5.41).

Initial Zoning

A/4.5 Once you have decided on your F & E requirements, an initial zoning diagram can be drawn as a first step to a detailed layout. This should denote broad bands of activity. For example, in a workshop layout a single block of colour can indicate where pedestal machinery is sited, with another colour showing where design work may take place.

A/4.6 The zoning diagram can then be agreed by teaching staff and worked up into a more detailed drawing, showing the position of specific items of F & E. Fig A/4-1 shows the two processes for a design and technology workshop.

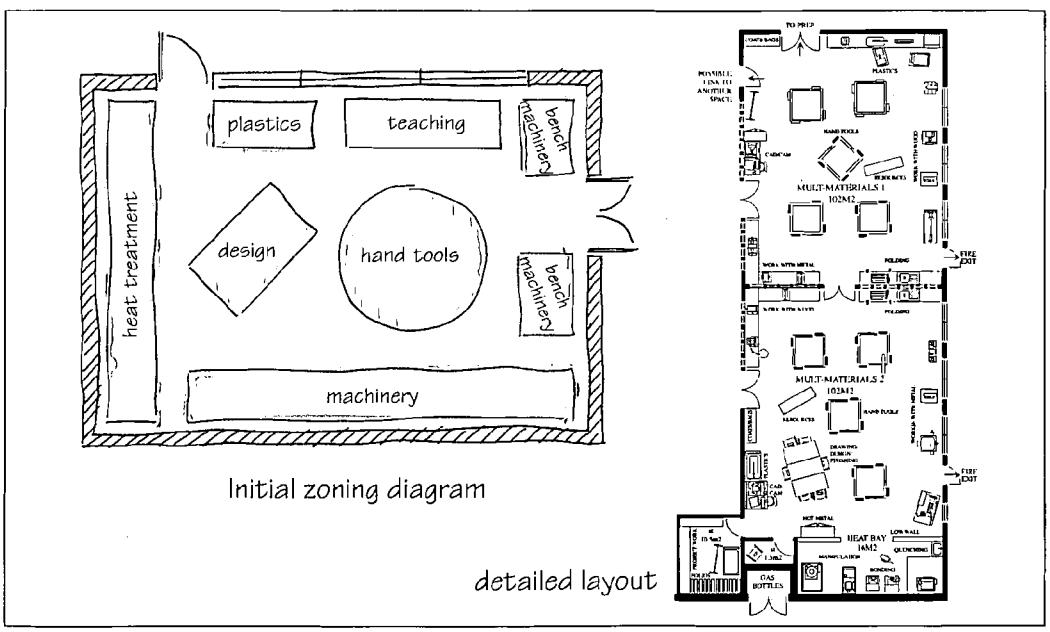

Fig A/4-1: Zoning and Detailed Layout Drawing

Determining a Planning Strategy

A/4.7 A series of 'rules' can be applied to form a planning strategy for all spaces within one department – regardless of specialism[1]. This will make the spaces more interchangeable and sufficiently adaptable to take on board various teaching requirements (see also para 1.4). The strategy may stipulate, for example, that all fitted F & E is placed around the perimeter of the room, leaving the centre of the room free to accommodate a variety of activities. F & E specific to the needs of individual spaces can then be worked into the layout.

Health and Safety Planning Issues

A/4.8 Health and safety issues are of great importance to a school and must be incorporated into the layout process. They include:

- safe distances between F & E items, such as machinery in workshops or benching in laboratories;
- easy access to fire escape routes, e.g. no fixed items of F & E which may block the route or exit;
- comfort, e.g. ensuring no-one is positioned too close to a doorway;
- safe positioning of F & E, e.g. away from circulation areas or door swings;
- the positioning of F & E in relation to natural and artificial lighting[2], particularly in ICT areas where glare can be a major obstacle to effective working[3];
- the location of equipment to ensure that safe supervision is possible.

A/4.9 Layouts will also help to determine the location of servicing outlets such as power and water, and to ensure that these are safely positioned. The drawings can inform a number of building professionals including services engineers etc.

A/4.10 Appendix C lists the relevant health and safety documents and Section 3 gives general information on health and safety issues directly related to furniture and equipment.

Creative Use of Furniture in Layouts

A/4.11 It is useful to look beyond the obvious function of an item of furniture. Furniture must be treated as a resource. If it is used imaginatively, it will not only enable activities to take place but can add to the quality of the experience. For example:

- tall storage units can be used to divide a space;
- low, mobile cupboard units can be wheeled against a desk to create discrete work areas (particularly effective in sixth form art or technology areas where a studio atmosphere can produce a more creative environment);
- the backs of storage units can be used for vertical display whilst the top of low units can be used for horizontal display;
- if size and appearance is compatible, general teaching tables can be positioned against information communication technology (ICT) tables to create L-shaped work stations – these shapes are a common feature of offices and can be created in ICT or Business suites without the need to necessarily invest in expensive office furniture systems (see also para A/1.10);
- in areas where formal work only takes place occasionally, octagonal or trapezoidal tables can create interesting formations particularly if pupils will be partaking in class discussions where 'horseshoe' arrangements are preferable.

---

1 BB 80, 81, 84 and 85 look at layout strategies for Science, Design and Technology, Music and Art respectively. See Section C/1.

2 BB90 'Lighting Design in Schools' DfEE 1999 gives useful advice on this issue, see Section C/1.

3 The DfEE's video 'Making IT Fit' gives useful guidance on effective ICT layouts and is available free of charge to all schools. See Section C/1.

Adaptability in Layouts

A/4.12 All furniture chosen for schools should allow layouts to be adaptable to take on board the changing needs of the curriculum, the school and the local community.

A/4.13 Furniture can allow adaptable layouts by being lightweight enough to be moved around easily. If it is not fixed, it will be possible to move without the need to repair the fabric of the building – and sometimes the furniture itself (see also para 1.6).

SECTION A/5: AESTHETICS

In any project, be it a refurbishment or new build, it is important to create an image which reflects the teaching ethos of the school and also the importance the school attaches to its environment. This section looks at some of the issues you may wish to consider to create an image the whole school is happy with.

Image

A/5.1 A school can create an image in a variety of ways. Using a limited range of furniture, for example, not only makes spaces more interchangeable (see also para 1.9) it also gives a suite of spaces a coherent feel. This approach may be particularly desirable if you wish to create distinctly homogenous departments. The image created in one department may be different to that in another to reflect the different teaching environments and the personalities who have contributed to its development.

A/5.2 It is important, though, that the image created is not too closely tailored to the needs of an individual teacher. It should be in line with all the teachers who will be sharing the environment (see also para 1.4).

Style

A/5.3 The 'style' of furniture and equipment (F & E) chosen will affect the appearance of the whole space as well as the products which fill it. It encompasses shape, structure, colour and finish.

A/5.4 Furniture, in particular, provides an opportunity to bring colour and style into the classroom. Using the same system of furniture in a space or a suite of spaces will result in a single style throughout and can give a suite a coherent feel.

A/5.5 Certain stylistic features can be introduced inexpensively to standard items of furniture by the careful mixing and matching of furniture systems or by the addition of other elements.

A/5.6 Although quality should always be the primary concern (see Section A/3), the following are some points to consider when looking at the style of F & E.

- What is the frame shape of a table? In a cantilevered table the legs cannot easily be seen from the front. This gives a sense of space in a room. Tables with a complex frame arrangement can make the classroom appear crowded.
- Unusually shaped table tops (e.g. trapezoidal) can create interesting table arrangements.
- A variety of edging materials are available for tables (see also para A/3.23). These can introduce a bright colour to a table whose horizontal surface is very neutral.
- Adding unusual handles to standard storage cupboards is a good and inexpensive way to introduce an interesting design feature.
- Attaching two different coloured doors to storage cupboards can be an effective way to achieve a non-standard look with standard furniture items. It is worth remembering however, that although large initial orders of such 'customised' items may be fairly economical, renewal of a few items later on may be expensive.
- Using a mixture of brightly coloured trays can enliven a standard wooden storage unit. Similarly clear plastic trays can make interesting resources more visible and more attractive to pupils.
- Simple banks of shelving can also act as a display bay when interesting resources such as musical instruments are stored. They can also help with acoustic problems[1].
- Certain surface finish materials give a seamless look to a run of benching. This can be effective, particularly in areas such as science laboratories where there is a large amount of work surface (see also para A/3.16–22).
- Some methods of supporting storage units and equipment (e.g. a 'picture rail' system) allow teaching environments to be varied (see also para A/1.38).

1 BB84, 'Music Accommodation in Secondary Schools', DfEE, 1999 looks at acoustic issues (see Section C/1).

- Carpets and other floor coverings are an ideal way to introduce various styles into a classroom. They can also be used to create zones which define different areas of activity.
- In practical areas or media centres, labels can be used to identify the different areas of activity on offer, giving pupils a better understanding of the room.
- In practical areas in particular, the ceiling can be used to hang pupils' models and pictures. Similarly, banners can be hung to denote activity areas.
- Blinds could be used in areas which are south-facing or that require dim-out. These can be an effective way to provide colour in a room, although be careful which colour – some colours retain heat and could make the room hotter. This is also the case with metal blinds which can often behave like mini radiant panels when directly facing the sun.
- Using murals or ceramic/plaster sculptural relief can break up large expanses of wall.

Colour

A/5.7 Which colours induce the most relaxed yet creative atmosphere, conducive to learning and good behaviour in schools, has long been a subject of debate. In the end the choice of colour is largely down to personal preference, fashion and what you, as a school, feel will create the 'ideal' environment.

A/5.8 The following are some general pointers to consider when looking at the application of colour.

- Warm, bright colours, such as yellow, orange or peach, tend to suit the generally outgoing temperament of young children.
- Passive, cool colours, such as blue-green, light green and beige, aid concentration and are particularly appropriate in secondary school classrooms.
- Don't assume primary schools have to be 'busy' with colour.
- Bold paint colour will need to be re-applied regularly if it is to retain its impact. The use of colour on walls is therefore preferable as it needs little preparation and can be applied quickly and easily. Doors or window frames[2], however, require preparation and are complicated to paint – better to keep them neutral and let walls make the impact.
- Use a silk paint finish for easy washing.
- Never use glossy colours which are prone to glare (e.g. white) on furniture, particularly for use with ICT.
- Avoid using dark colours in areas which need good light levels such as art rooms. Dark colours soak in light and reflect very little back. Ceilings, particularly, should be painted white as walls may be covered in art work, the colours of which cannot be anticipated.
- Reds and oranges have long been considered stimulant colours and may therefore lead to antagonism in areas where supervision and order can be problematic, e.g. corridors.
- In multi-storey schools, painting the corridors on each floor a different colour will help pupils to find their way around the building more easily.
- Use bold colours on the furthest wall in long rooms or corridors to bring the wall 'nearer' and to provide a focal point.
- A teaching wall which is a different colour from the rest of the walls in a classroom helps pupils focus on the teacher, but use only soft neutral colours.
- In rooms where formal teaching is rare, e.g. ICT rooms, a relaxing blue/green colour helps to relax the pupils' eyes as they look up from their work.
- Bright colours and strong patterns should be avoided on horizontal working surfaces as they can be distracting.

2 Avoid any bold colours if the room has little daylight, white walls significantly improve daylight levels. If necessary, seek additional advice on this (see also Appendix C).

- Avoid highly contrasting patterns and colour combinations, particularly if a school has any pupils with epilepsy[3]. However contrasting colours can help pupils with visual impairments to identify floors and doors and other features.
- Dark colours absorb sunlight (and heat) much more than light colours. With some plastic furniture items such as seats and trays, the heat build up from direct sunlight (sometimes up to 50°C) may cause the plastic to bow and lose strength.
- In rooms with particularly small windows, paint the frames a bright, reflective colour to draw the eye to the window and away from the darker parts of the room – white is undoubtedly the most reflective.
- Colouring one wall a different, bolder colour to the other three gives the room definition, depth and interest. This is particularly true if the coloured wall is opposite the entrance. The coloured wall could contain banks of shelving drawing the eye to the display and the bold colour behind.
- Use welcoming, warm colours in 'pastoral' areas of the school such as special educational needs rooms, reception areas and dining rooms.
- Avoid cold colours (particularly pale blues) on fixtures and finishes in north-facing rooms with lots of glazing. In winter this can make the room feel even colder and reduce concentration amongst pupils.
- Using blackboard paint on one wall of a semi-informal area such as a sixth form area, can promote lively lessons where pupils can be encouraged to express their ideas on the wall in a spontaneous way!

3 Professional advice must be sought on this complex issue (see also Appendix C).

CASE STUDIES

APPENDIX B

CASE STUDY B/1: PURCHASING F & E FOR A NEW DEPARTMENTAL SUITE IN A LARGE SECONDARY SCHOOL

Background

Ivybridge Community College serves a wide rural catchment area and currently has 1880 11–18 pupils on roll. This is set to exceed 2000 by the year 2002 and to accommodate this number, eight major building projects have been undertaken over the past six years, totalling £11m.

Fig B/1-1: Ivybridge College *(Photograph: Devon County Council)*

In all projects the College used the Local Education Authority (LEA) architect or an architect contracted by the LEA. The LEA contracted to a building contractor on behalf of the College. The LEA architect also acted as project manager representing the College's needs and giving them feedback on work progress from the building contractor. For some furniture and equipment (F & E) products the College used the LEA supplies department catalogue. However, where fitted furniture products were not available the LEA helped the College go out to tender providing the documentation and with that the reassurance that the correct procedures were being followed.

Rationale

Over the last six years the College project team have gained considerable experience in managing F & E purchasing projects and have concluded that:

- having regular project meetings where the architect updates the College on building work progress means that, should a project be delayed, associated trades could be informed in plenty of time and penalty claims avoided;
- allowing a day in total off for all staff in the department benefiting from building/F & E work enables them to refine their requirements and reactions to schemes, their comments can then be filtered through the Head of Department who has input into pre-project meetings;
- keeping all staff informed of project progress through termly newsletters creates a positive attitude to what is sometimes intrusive building work;
- getting their LEA to tender for F & E products or using their LEA supplies department contracts gives them greater protection in the case of dispute, as the weight of LEA purchasing power forces a manufacturer to settle disputes quickly;
- limiting fixed F & E as much as possible keeps down percentage linked building costs;

This Appendix records 'real life' examples of furniture and equipment (F & E) projects as recounted by the school's Heads and other senior management. The procedures followed directly reflect the policy of the individual schools and their LEAs .

- using loose F & E gives greater freedom as fewer building professionals (eg on-site joiners etc) need to be involved;
- purchasing standard products is advantageous in the long term (despite quantities of orders allowing them to purchase one-offs) as small scale replacement of non-standard products at a later date would be expensive;
- moving existing machines in workshops can sometimes require them to be upgraded as Health and Safety requirements then come into force;
- asking staff to analyse exactly what functions they actually require of an item of equipment prevents over-specification and therefore over-spend. It also avoids 'trends of the moment';
- if something is of concern and cannot be resolved through discussion with the building contractor on the site it should be recorded by video camera in case of future disputes;
- keeping old brochures relevant when orders were made is advantageous, manufacturers' statements on suitability of their products may change in future years – brochures can provide background evidence if 'fitness for purpose' questions are raised;
- purchasing a large number of F & E items, some of which would be used for projects later in the building development plan ensures best possible discount (the College was insistent that storage space was created out of 'voids' in the building structure);
- staggering purchases over a period of time avoids them all having to be renewed at the same time, it also means deliveries can be appropriately dealt with;
- despite the good deals sometimes offered, non-ordered invoices must be avoided;
- most equipment manufacturers are happy to hand over installation to building contractors;
- as maintenance is a constant rolling programme (given the size of the College) using one paint colour is more easy to co-ordinate, the bulk purchase of one type of paint also offers economies of scale ('Forth Bridge' principle easy to adhere to).

Project Profile: new and upgraded Science laboratories

Recently the College embarked on a project to accommodate a total of 14 new or upgraded science laboratories. The process they followed is outlined below:

- the College identified several project suppliers through visits to trade shows;
- they identified four potential suppliers after looking in detail at each manufacturers products;
- the Principal invited the four manufacturers to visit the College and discuss needs; the Head of science and the Colleges premises manager (p/m) were present in these discussions;
- following discussions, each manufacturer was then able to take the Head of Science and the p/m to visit other installations relevant to their requirements;
- the College found discussions with end-users of major benefit – talking with fellow teachers meant that small but nevertheless important issues were raised;
- each of the four manufacturers drew up proposed layouts which were commented on by the teachers and the Architect (some had implications for building arrangements). These were then modified until all were acceptable to the science staff and which also meant manufacturers could tender on a similar basis;
- a specification was then drawn up with help from the architect and an amalgamation of advice from all manufacturers;
- the LEA then drew up tender documentation and did a credit check on the tenderers. Using the LEA gave the College the assurance that best value procedures had been followed, the LEA opened the tenders at the stipulated date;
- in this case, standard practice of the LEA was followed and the contract was awarded to the lowest tenderer. In subsequent tenders the LEA have accepted particular reasons for going with a company whose price is not necessarily the lowest.

CASE STUDY B/2: PURCHASING F & E FOR A NEW-BUILD SECONDARY SCHOOL

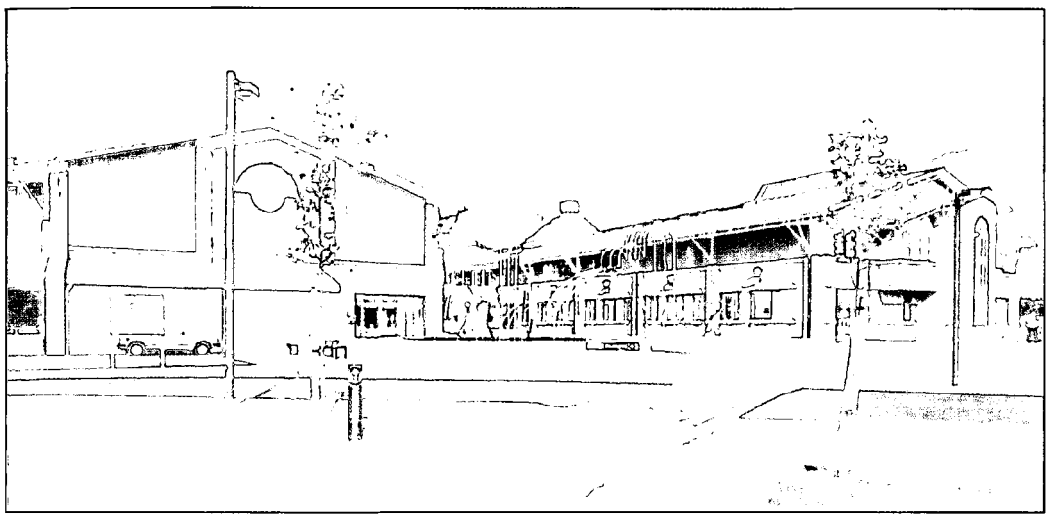

Fig B/2-1: Tabor High School *(Photograph: Essex County Council)*

Background

Tabor High School currently has 900 11–16 pupils on roll. Originally on 3 sites, a two-phase building rationalisation programme brought them together onto one site in September 2000. The school has a joint use agreement with the District Council for the provision and use of a sports centre on the site.

The school worked with their LEA (who acted as the client) and the LEA's appointed architects ensuring that regular meetings were held between all three parties. The school had the main responsibility for purchasing loose F & E with fixed F & E left largely to the architects, although the school had a say in what products were chosen. This arrangement of responsibilities is based partly on the source of funding. The capital budget for loose F & E was delegated to the school whilst the fixed F & E came from the building budget. This is a standard arrangement in new-build schemes for schools already in operation whilst the build takes place.

Rationale

The school has been involved in the planning of the building work since the first phase in 1992. The second phase saw a considerable input from the school project team, made up of the Headteacher, the Bursar and the school's information communication technology (ICT) systems manager. Comments and requests by individual Heads of department were filtered through the team to the LEA's project manager and architect to simplify the procedure. As a result of this arrangement the team has gained a wide range of experience and knowledge – this has enabled them to draw several conclusions about running a project on F & E, namely that:

- as the purchase of both fixed and loose F & E often comes late in the design and build process, unforseen building costs can often be targeted from this so-far unspent budget – assuring a clearly defined budget figure for all categories of F & E avoids this to a certain extent;
- handling the tendering of some products in-house avoided on-costs for other organisations' administration;
- going direct to a manufacturer was not always the cheapest method as manufacturers often give catalogues a bigger discount than individual schools;
- long term maintenance issues are a primary consideration when products are being selected;
- a clear code of conduct drawn up between the school and the building contractor prevented interference from either workers or pupils and helped enforce the health and safety procedures necessary in a building project;
- a school project team of three, with good communication between each prevented any one individual becoming indispensible;

- clear records of what was requested of any contractor by the school avoids confusion and possible disagreements, similarly agreements on the telephone should always be confirmed in writing;
- in areas with a high level of services it is important that all contractors are given the most up to date drawings, and in some cases information not necessarily within their immediate responsibility, for example architectural elevations should be given to staff who are determining furniture layouts, they in turn should give the layouts to mechanical and electrical contractors in order to identify service points;
- LEA curriculum advisers expertise was invaluable in areas with specialist facilities;
- a tight specification and tender is invaluable in order to get the most appropriate product for the best price;
- assuming best deals can be achieved; local suppliers have the distinct advantage of convenient location, particularly if part of the contract includes a maintenance arrangement;
- a company which can provide both a product and an associated maintenance contract will often offer the advantage that responsibility lies solely with the supplier and blame cannot be apportioned to supplier/maintenance contractor if the product was to fail;
- it is important to clearly identify who is responsible for placing (putting in the rooms) and positioning (putting in the exact position in the room) the loose F & E - the suppliers, building contractor or the school;
- all furniture should be clearly labelled with what it is and preferably where it should go, particularly if it is being positioned by a party not involved with the layout or F & E purchasing process;
- a complete wall painted with a chosen colour will give a better idea of it's impact than a small swatch or batch number, similarly full colour boards with wall, floor and furniture finishes together gives a better overall impression than separate samples;

Project Profile : ICT

As part of the project team the ICT systems manager was keen to use the opportunity to modernise the ICT infrastructure in the new phase two building and to allow for long term flexibility. The process the school followed is outlined below;

- As part of the initial process the school:
  - spoke to a number of leading ICT companies;
  - utilised the ICT systems manager's own knowledge and experience;
  - spoke to other Heads of ICT in the County;
  - consulted LEA advisers;
  - visited ICT installations in other schools;
  - went to exhibitions;
  - spoke to colleagues in the school about their needs;
  - researched new technologies in brochures and magazines etc.
- from that emerged a vision of where the school wanted to be and the equipment needed, for example they determined the need for an integrated administration and curriculum network and for Internet access;
- the school decided to use the opportunity of building work to flood-wire all spaces, this meant meeting some of the need from revenue costs but made sense to lay wiring, hardware hubs and switches whilst building work was taking place;
- the school made a project plan which took on board their SBDP and EDP for five to ten years – the EDP largely formed the basis of the project plan;
- a broad budgetary figure was then identified;

- the requirements were broken down into several component parts which made the tender more manageable and easier to identify where best value would be achieved, these were:
  - infrastructure;
  - ongoing maintenance;
  - replacement;
  - hubs and switches;
  - servers and manufacturers software (including support);
  - terminals and software;
- the school went to four companies in total;
- the contracts were offered for one year with an option for renewal each year thereafter;
- during the tender process it became apparent to the project team that going to different companies for different components of the project would make the contract difficult to monitor and also possible for different companies to blame each other when separate components went wrong;
- by offering one company several clearly defined packages of work the school is able to monitor a single line of responsibility but also has the option of cancelling individual contracts each year should one area of work be unsatisfactory;
- following the upgrade of the ICT facilities as part of the capital project an ICT maintenance contract started at the end of September, funded by the school's delegated budget.

CASE STUDY B/3: PURCHASING F & E FOR A NEW-BUILD PRIMARY SCHOOL

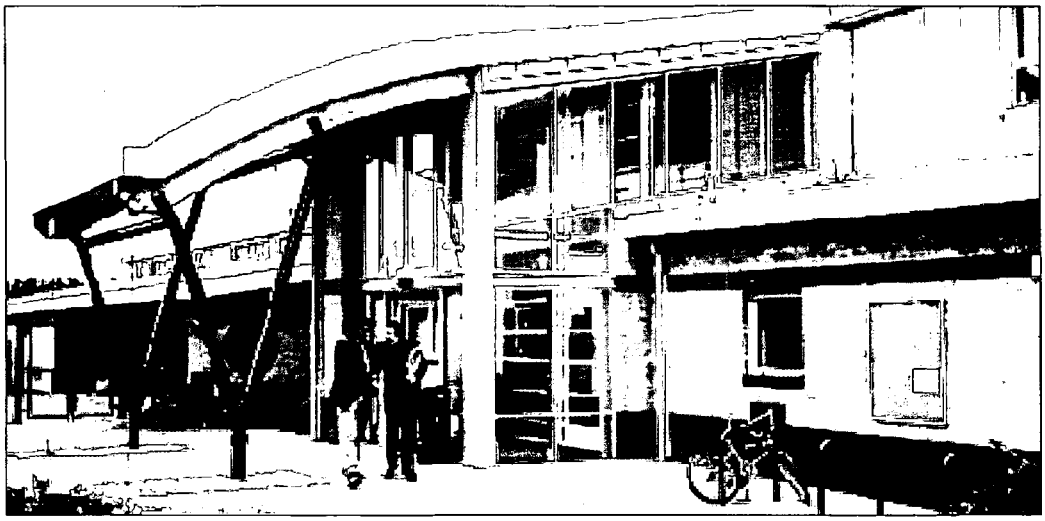

Fig B/3-1: Willow Tree School

Background

Willow Tree is a new school built to replace several deteriorated 1950's buildings spread across a large site. The school is now housed in one building and, as a result is much more efficient to maintain and manage. The new build has freed up a significant part of the site for new housing, the sale of which provided the funding for the school. Built in one phase only, the project took four years from start to completion and opened in September 1999 to accommodate a total of 882 pupils – including a 100 nursery places.

The project was designed by the local education authority (LEA), in close co-operation with the school's project team made up of the three senior school management team (the Head and 2 Deputies), Chair and Vice Chair of Governors and a parent governor. The LEA liaised with the project team on the choice of fixed F & E and co-ordinated their purchase. Loose F & E was largely determined by the school project team with the LEA assisting the school with purchasing arrangements once the budget was confirmed.

Rationale

The senior school management team had a very clear view from the outset of the kind of environment they wanted to create. They were keen that the building and the F & E should have a coherent link and were therefore very keen to set about making choices for F & E at an early stage. Exact budgets for loose F & E were unclear for some time during the project but choices were made in order to be prepared when it did arrive.

Having worked to create a school the team are happy with has enabled them to formulate a purchasing rationale they will use for future F & E projects. Here the team;

- drew up a 'wish list' of F & E and added to it as they did more research;
- used computerised spreadsheets from the outset for their 'wish-list', inputting estimated costs and quantities and changing these as information was confirmed, this meant they could use the spreadsheet as a record of what they had ordered and can now use it as an audit of the F & E items they have in-house;
- reviewed each week 'where they were' with each product, logging when quotes had been received, a firm order had been made and when delivery dates were set for;
- kept invoices and brochures for further orders and as a record of where products came from, this they felt, takes into account the possibility of members of the team leaving;
- made most decisions on F & E in consultation with other members of staff;

- were able to ensure that the loose furniture matched in with their aesthetics by being involved in the choice of fixed F & E;
- visited exhibitions, this they felt was an invaluable way of seeing and comparing a number of products in one go;
- considered how consumables would be affected when new items of equipment were bought e.g: how would paper supply be affected if the number of computers was increased (they did not however include consumables in their F & E wish list);
- used their LEA's knowledge of electrical products extensively;
- staggered orders to prevent difficulties in production runs for manufacturers;
- for certain products, used a buying consortium which allowed them to store the products in their warehouse prior to the building's completion;
- purchased table and chair sets from an importer. This, they discovered, gave them less flexibility with delivery dates and a facility had to be arranged for storage which had insurance implications;
- used a number of criteria from 'service' to 'aesthetics' to ensure a good product was selected during competitive tendering processes;
- used the LEA supplier of office furniture for their administration area;
- obtained guarantees from manufacturers that products were safe in certain situations if this was not already stipulated in brochures etc;
- chose benches for dining furniture as there was more flexibility in the number of pupils seated.

Project Profile: Interactive Whiteboards

The senior management team were keen to purchase interactive whiteboards as part of their vision for the school. This choice was not without problems, however, and the strategy for purchasing these items is outlined below;

- 18 months before the school opened the Head had researched various ways of using ICT as part of teaching by looking in educational magazines etc;
- the Head first saw the whiteboards at the 'Education' show (see also para 2.1). This encouraged her to explore the market more to find out what they did and how they could slot into her philosophy for ICT;
- the team then set about looking for different suppliers of the product – it was then discovered that only two manufacturers produced whiteboards;
- the team learned everything about the two products – to enable them to understand how the products differed;
- the team went to a secondary school which already had interactive whiteboards to see how they operated as a teaching tool;
- the Head arranged a presentation of the whiteboards to the school, the LEA and key inspectors;
- the project team had to bear in mind the preliminary training needs involved in such a new piece of teaching technology;
- the Head was, by then, looking at prices for comparison and also the scale of discount offered depending on how many whiteboards were bought;
- it was here that the team hit on a problem with the purchasing process, their experience showed that;
  - it was very difficult with a new and innovative product to find sufficient manufacturers of the product for a tender exercise to be carried out;
  - companies which develop new products are often newly formed and do not have sufficient accounting records to get on an LEA approved list;

- the team then had to:
  - get permission from the LEA to waive the tender clause about new companies;
  - go out to tender with five suppliers; of the five suppliers, two were the manufacturers the project team had found and the remaining three were known ICT suppliers;
  - write a performance specification stating exactly the functions the product had to perform, this was undoubtedly made easier by the lengthy research done by the project team in advance of the tender;
  - ask the LEA to parcel up the specification and carry out the background administration;
  - obtain quotes from the companies for the installation of the whiteboards and projectors as part of the tender exercise. This required a clear specification from the school quoting exact positions on walls and ceilings;
- the school received three returned tenders, the school project team (including parent Governors) then looked at the three bids – the LEA, assured of a fair tender exercise, left the school to make the final decision.
- as part of carrying out a tender exercise on new, highly technical products the team were also able to conclude that:
  - a maintenance contract must also be bought in, particularly for networking;
  - on-going costs must be considered e.g. built in projector bulbs etc;
  - a record must be kept of what manufacturers' claim they will do as part of their service and the products' performance record, the whiteboards' software enables the senior school management team to keep track of how long the products have been used over a day, week, term etc, which enables them to track the usefulness of the product and the success of use by various members of staff;
  - by allowing the school to be involved in the marketing of a new product, substantial discounts were negotiated;
  - a partnership between the school and the LEA was essential to ensure best value was achieved and the school was able to utilise the council's expertise in procurement administration.

USEFUL REFERENCES

APPENDIX C

SECTION C/1: USEFUL PUBLICATIONS

Note. The following Appendix is not intended as an exhaustive list. The information given in documents may not always reflect the views of the Department and in the case of commercial organisations referred to is not necessarily a recommendation of their services.

Health and Safety (General)

- Health and Safety Executive. **CDM Regulations – How the Regulations Affect You**. HSE 1995. PML 54.
  Gives brief advice on the effect of CDM on the various building professionals and useful, more detailed references.
- **The Control Of Substances Hazardous To Health Regulations 1999**. (Statutory Instrument No. 1999/437). London: The Stationery Office 1999. ISBN: 0 11 08 2087 8.
- Health and Safety Executive. **A Step By Step Guide To COSHH Assessments**. Rev. edition. London: HMSO, 1999. ISBN 0717614468.
  Gives details of the risk assessments necessary for work associated with toxic and corrosive substances.
- **The Management of Health and Safety at Work Regulations 1992**. (Statutory Instrument 1992 No. 2051). London: HMSO, 1992. ISBN 0 11 025051 6.
- Health and Safety Commission. **Management of Health and Safety at Work: Management of Health and Safety at Work Regulations 1992: Approved Code of Practice**. London: HMSO, 1994. ISBN 0 7176 0421 8.
- **The Workplace (Health, Safety And Welfare) Regulations**. 1992, SI 1992 No 3004. London: HMSO, 1992. With:

  Health and Safety Commission. **Workplace health, safety and welfare: Workplace (Health, Safety and Welfare) regulations 1992: approved code of practice and guidance**. London: HMSO, 1992.

  Health and Safety Executive. **Management of health and safety at work: management of health and safety at work regulations 1999**. Approved code of practice and guidance. HSE Books, 2000. ISBN 0717624889.
- Health and Safety Executive. **The Responsibilities of School Governors for Health and Safety**. London: 1992. ISBN 0 7176 0436 5.
- British Standards Institution. **Health And Safety For Design And Technology In Schools And Similar Establishments**. BS 4163. Milton Keynes: BSI, 2000.
  Code of Practice giving guidance on planning services and equipment and the safe use of these facilities for design and technology.
- The National Association of Advisers and Inspectors in Design and Technology. **Managing Health and Safety in School Workshops**. NAAIDT Publications, 1992. ISBN 0 906457 08 04.
  Covers most Health and Safety issues for design and technology workshops and gives useful summaries of relevant H & S legislation.
- The National Association of Advisers and Inspectors in Design and Technology. **Managing Health and Safety in Food and Textiles in Schools**. NAAIDT Publications, 1994. ISBN 0 906457 10 6.
  Covers most Health and Safety issues for the teaching of food and textiles workshops, including management responsibilities and gives useful summaries of relevant H & S legislation.
- CLEAPPS School Science Service. **Risk Assessment For Technology In Secondary Schools**. Uxbridge: CLEAPPS School Science Service, 1990.
  Lists the risks involved for different d & t activities (eg soldering) and the use of various items of equipment.

- Department for Education. **A Guide To Safe Practice In Art And Design**. London: HMSO, 1995. ISBN 0 11 270896 X.
  Covers all aspects of health and safety in art teaching including management responsibilities and the safety of art equipment.
- Department for Education and Employment. **Fire Safety**. Managing School Facilities Guide 6. The Stationery Office, 2000. ISBN 0 11 271040 9.
  Offers guidance on how to manage fire safety and minimise the risk of fire in school buildings.

Services and Environmental Design

- Department for Education and Employment. **Guidelines for environmental design in schools (Revision of Design Note 17). (Building Bulletin 87).** London: The Stationery Office, 1997. ISBN: 0 11 27 1013 1.
  Gives general guidance and statutory requirements for acoustics, lighting, heating, ventilation and water supplies.
- Department for Education and Science. **Colour in school buildings** (4th Edition), **Building Bulletin 9**. 1969. Out of print (Photocopy available from The Stationery Office).
- Department for Education and Employment. **Lighting Design for Schools. Building Bulletin 90**. The Stationery Office 1999. ISBN 0 11 271041 7.
  Gives advice on the process of lighting design in the context of the recommended constructional standards for schools, and the various types of spaces and activities found in schools.
- Health and Safety Executive. **Electrical Safety in Schools**. Guidance Note GS 23. HSC, 1985.
- British Standards Institution. **BS 1363. Specification for 13 A Fused Plugs and Switched and Unswitched Socket Outlets**. Milton Keynes: BSI, 1984, 1989, 1995 In 5 parts.

Furniture (General)

- Department for Education. **Educational Furniture Database: Setting the Standards. Broadsheet 31**.
  Short paper detailing the standards applicable to educational furniture and background to their relevance to value for money.
- British Standards Institution. **BS 5873: Educational furniture**. Milton Keynes: BSI, 1980, 1991, 1985, 1998. In 5 parts.
  Covers the requirements necessary for tables, chairs and storage to conform to this standard, see also Broadsheet 31.
- British Standards Institution. **BS 4875: Strength and stability of furniture**. Milton Keynes: BSI, 1985. In 8 parts.
  Covers the requirements necessary for tables, chairs and storage to conform to this standard, see also Broadsheet 31.
- British Standards Institution. **BS 3202: Laboratory Furniture and Fittings**. Milton Keynes: BSI, 1991. In 4 parts.
  Covers the requirements necessary for laboratory furniture to conform to this standard.
- British Standards Institution. **BS 5852: Methods of test for assessment of the ignitability of upholstered seating by smouldering and flaming ignition sources**. Milton Keynes: BSI, 1990 (1998). ISBN 0 580 19157 5.
- British Standards Institution. **BS 7176: Specification for resistance to ignition of upholstered furniture for non-domestic seating by testing composites**. Milton Keynes: BSI, 1995. ISBN 0 580 24530 6.
- British Standards Institution. **BS 6396: Specification for Electrical Systems in Office Furniture and Office screens**. Milton Keynes: BSI, 1995. ISBN 0 580 24736 8.
- British Standards Institution. **BS 5459: Specification for Performance Requirements and Tests for Office Furniture**. Milton Keynes: BSI, 1977, 1983, 1990. In 3 parts.

- Department of Education and Science. **Body Dimensions of the School Population. Building Bulletin 62**. HMSO 1985. ISBN 0 11 270567 7.
  A guide to the sizes of pupils, useful as a reference when working out heights of workbenches, shelves etc.
- Stephen Pheasant. **Bodyspace; Anthropometry, Ergonomics and the Design of Work**. 2nd Edition. Taylor and Francis. ISBN 0 7484 0326 4.
  A comprehensive guide to the science of ergonomics with useful principles to work to when working out dimensions such as sink and workbench heights.

Equipment (General)

- Department for Education and Employment. **Fume cupboards in schools (Revision of Design Note 29). Building Bulletin 88**. The Stationery Office 1998. ISBN: 0 11 271027 1.
  Covers legal requirements, specification and siting, extraction systems, commissioning and monitoring (including test procedures and schedules), repair, and upgrade of existing fume cupboards.
- British Standards Institution. **BS 7258: Laboratory Fume Cupboards**. Milton Keynes: BSI, 1994. In 4 parts.
- Department of Trade and Industry. **Product standards. Machinery: guidance notes on UK regulations**. Guidance on the supply of machinery (safety) regulations 1992 as amended by the supply of machinery (safety) (amendment) regulations 1994. 30/5/95, URN 95/650..
- **Health and Safety (display screen equipment) regulations 1992**, SI 1992 No 2792. London: HMSO, 1992.
- Health and Safety Executive. **Display screen equipment work. Health and safety (Display screen equipment) regulations 1992**, HSE Books, 1992, ISBN 0717617040101
- **Provision and use of work equipment regulations 1992**, SI 1992 No 2932. London: HMSO, 1992.
- Health and Safety Commission, **Safe use of work equipment. Provision and use of work equipment regulations 1998, approved code of practise and guidance**, 2nd edition., HSE Books, 1998, ISBN 0717616266
- **Personal Protective Equipment Regulations 1992**, SI 1992 No. 2966. London: HMSO, 1992. With:
- Health and Safety Executive. **Personal Protective Equipment at Work, Guidance on Regulations**. Personal protective equipment at work regulations 1992, HSE Books, 1992, ISBN 0717604152

ICT Issues

- Department for Education and Employment. *Making IT Fit: Accommodating Information Technology In Schools*. 1995. Free from the DfEE, telephone 020 7273 6718.

Curriculum Accommodation Guides

- Department for Education and Employment. **Design and Technology Accommodation In Secondary Schools: A Design Guide. Building Bulletin 81**. The Stationery Office 1996. ISBN 0 11 271917 6.
  Includes information on planning, furniture and equipment and health and safety. Illustrated by detailed plans of individual teaching spaces.
- Department for Education and Employment. **Music Accommodation In Secondary Schools: A Design Guide. Building Bulletin 86**. The Stationery Office 1997. ISBN 0 11 271002 6.
  Provides information on planning, furniture and equipment, services, including acoustics, and cost of new and refurbished music accommodation.
- Department for Education and Employment. **Art Accommodation In Secondary Schools: A Design Guide. Building Bulletin 89**. The Stationery Office 1998. ISBN 0 11 271029 8.
  Provides information on planning, furniture and equipment, services and cost. It is illustrated by detailed plans of individual teaching spaces.
- Department for Education and Employment. **Science Accommodation In Secondary Schools: A Design Guide. Building Bulletin 80 (revised 1999)**. The Stationery Office 1999. ISBN 0 11 271039 5.
  Offers guidance on the planning of laboratories and preparation rooms, on servicing systems and furniture and equipment.

DfEE Regulations and General Guidance

- **The Education (School Premises) Regulations 1999**. (Statutory Instrument 1999 No. 2). London: TSO, 1999. ISBN: 0 11 08 0331 0.
- Department for Education and Employment. **The 1999 Standards for School Premises** (Circular 29/2000). London: DfEE, 2000.
- Department for Education and Employment. **1997 Constructional Standards**. London: DfEE, 1997.
- Department for Education and Employment. **How to apply for funding for capital and repair projects. Changes introduced on April 1 2000**. London: DfEE, 2000. Ref: DfEE 0027/2000.
  A guide to funding for VA schools, also gives information on the division of responsibilities between governors and LEAs.
- Department for Education and Employment. **Area guidelines for schools. Building Bulletin 82**. London: HMSO, 1996. ISBN 0 11 270921 4.
  Gives guidance on the provision of teaching and non-teaching accommodation in primary and secondary schools. It is aimed at the early stages of a school's design and sets out a method for determining area needs and accommodation priorities.
- Department for the Environment, Transport and the Regions. **The Building Regulations 1991. Approved Document B: Fire safety, 2000 edition**. DETR, Rotherham S63 9BL. 2000. ISBN 1851123512.
- Department for Education and Employment. **Access for disabled people to School Buildings. Building Bulletin 91**. The Stationery Office 1999. ISBN 0 11 271062 X.
  Gives guidance on how governors, managers, architects and LEAs can achieve optimum accessibility for their school buildings.
- Department for Education and Employment. **The Outdoor Classroom. Building Bulletin 71 (2nd Edition)**. The Stationery Office 1999. ISBN: 0 11 271061 1.
  Describes the range of possible educational uses for school grounds and suggests how the necessary resources may be created and managed.

Miscellaneous

- RIBA Schools Client Forum. **A Guide for School Governors: Developing School Buildings**. RIBA, 2000 London W1N 4AD.
  Advice on the design and maintenance of school buildings and the process of building projects.
- **Local Authorities (Goods and Services) Act 1970 Elizabeth II Chapter 39**. SO, 1970. ISBN 0 105439703.
- Great Britain. **Value Added Tax Act 1994 Elizabeth II Chapter 23**. HMSO, 1994. ISBN 0 105423947.
- Department for Education and Employment, Architects and Buildings Branch. **Information on Costs and Performance Data**. DfEE, June 1997.
  Gives information on the ranges of F & E costs per pupil, curriculum subject and departmental suite.
- Adler D (editor). **Metric handbook. 2nd edition**. Oxford: Butterworth Architecture, 1998. ISBN 0 75 06 0899 4.
  Useful advice on the size and distances allowed for various types of building space and associated furniture and equipment, eg corridors, labs, offices etc. Includes a section on school design.
- Akzo Coatings plc. **Decoration Guidelines for Schools and Colleges**. 1992.
  Useful guidelines on the basic principles of colour application and the management issues associated with painting school buildings.
- DFEE, Architects and Building Branch. **Brief for the Design of Staff Rooms**. 2000. Free from DFEE. 020 7273 5718.
  Gives useful points on the design of staff rooms including planning. F & E and colour application

SECTION C/2: USEFUL WEB SITES

Purchasing

www.sopo.co.uk

Its aim is to advise local authorities on all purchasing and supplies matters of national/general interest, it also provides downloadable reports and guidance on best practise in purchasing.

www.cips.org.

The Chartered Institute of Purchasing & Supply is an organisation serving all sectors of the purchasing and supply profession. Website gives details of booklets on purchasing issues including guidance on the European Purchasing Directives.

www.hm-treasury.gov.uk/guid.html

Gives advice and information on most aspects of public spending. It gives useful information on the Private Finance Initiative and procurement and it's associated legislation, including the EU procurement directive. It also offers links to useful reports, publications and websites.

General

www.dfee.gov.uk

The Department's site enables links to pages giving details of the latest Government educational initiatives. A governors site may be of particular interest. This lists frequently asked questions on roles and responsibilities and gives information on health and safety issues.

www.clicktso.com

Lists educational publications produced by The Stationery Office and gives general information on each and offers an on-line ordering service.

www.oecd.org/els/edu/peb/index.htm

The Programme on Educational Building (PEB) promotes the exchange of ideas and information on various educational facilities from various countries. It produces publications and runs seminars and is backed by various Governments. Although primarily concerned with educational buildings, it does touch on resource issues such as ICT. It's website gives details of its publications and current research and offers links to other educational building websites.

Ergonomics

www.eihms.surrey.ac.uk/robens/erg/links.htm

Provides a useful introduction to ergonomics through its links to other sites on ergonomics.

http://www.hse.gov.uk/pubns/vdus.htm#1

Information on work related aspects of ergonomics can be sourced from these Health and Safety Executive web pages.

www.openerg.com/index.htm

General information on ergonomics and a checklist of ergonomic issues in office furniture and layout which may be of use to schools.

Health and Safety (General)

www.hse.gov.uk.sources.index.html

Gives information on the Health and Safety Executive's publications and how to order them. Also offers a search facility to identify relevant publications and current research.

www.cleapss.org.uk

The site of the School Science Advisory Service. Lists their publications and research on the design and

planning of school laboratories and various aspects of health and safety in science and design and technology teaching.

Furniture and Equipment (General)

www.dfee.gov.uk/schbldgs

Information from the Department's Capital and Buildings division on various aspects of school buildings with a section on F & E and layout issues.

www.besanet.org.uk

A guide to the suppliers of educational F & E, what's new on the market and news of exhibitions and events schools may find of interest.

http://productselector.co.uk

The RIBA Product Selector Online gives a series of product headings which in turn lists the names of relevant manufacturers. The site concentrates mainly on building products but does include some fixed furniture manufacturers.

www.cfg.gov.uk

Essentially an advertising site but includes useful information on the positioning of furniture, facts on CFG's (Counties Furniture Group) products and links to other useful sites.

www.bsi.

Lists standards produced by the BSI and gives information on their background and interpretation. Part of the site enables the user to type in product names and to note the relevant BS number.

www.tes.co.uk/tp/900000/PRN/teshome

Features articles from back issues of the *Times Educational Supplement* and a search facility which allows the reader to type in a key word and access all relevant articles on that subject.

http://site.yahoo.net.riba-library/oncat

Allows the reader to access articles from 300 architectural journals (and photographs, drawings, books and Audio-visual materials) through a key word search facility. Features buildings, interiors, furniture etc from all over the world.

Building Work

www.riba.net/

Gives information on the services architects can provide and a list of practices with specific experience in various sectors of education ie nursery, primary etc.

www.ta.forum.org.uk

A list of trade associations. Tap in a profession and the site will provide the name of the relevant trade association a potential contractor should belong to.

ICT

www.becta.org.uk/technology/faqs/workstation

A list of frequently asked questions on the design of computer workstations from BECTA, the Government agency for ICT. The site offers recommended publications, links to other useful web pages and further information from BECTA itself, including a useful summary of the National Grid for Learning Initiative.

www.ngfl.gov.uk

Linked to the DfEE site, this site lists information on all aspects of ICT use in schools including the safe use of computers and a list of learning resources for various sectors of education.

INDEX

Adaptable/adjustable Furniture 1.6–10, A/1.22–23, A/1.30, A/1.38, A/2.12–15
Architects 3.19, 4.7–8, 5.48–55, 5.68
Asset Management Plans 3.12, 3.17–18
Audio Visual Equipment 3.30

Benching A/1.42–46, A/2.3, A/2.11, A/2.20, A/3.18, A/4.8, A/5.6
Best Value (see Value for Money)
British Educational Suppliers Association 2.6, 2.14, 3.13, 5.36, A/3.2
British Standards A/1.15, A/1.39, A/3.1–7, A/3.25
Brochures and Catalogues 2.4–7, 5.3, 5.6, 5.36, 5.62, A/3.5
Building Contractor 3.19, 3.25, 4.8, 5.2, 5.8, 5.49, 5.56–61, 5.68

Capital Funding Arrangement 3.6–13, 3.16, 4.40
Capital Item 3.20–33
Capital Projects 3.16, 3.34, 3.37, 4.16
Categories of F & E 3.19–41, A/1.2
Catering F & E 3.26
CDM Regulations 5.52
Chair and Table Fit A/2.8–11
Chairs:
- Dining A/1.51–53
- Folding A/1.25
- General 3.28, 4.25, A/2.8–10, A/2.15, A/2.24, A/3.2
- Polypropelene A/1.14–21
- Upholstered A/1.29
- VDU A/1 22–24
- Wooden A/1.21

Colour 4.12, A/3.17–18, A/3.21, A/5.3, A/5.6–8
Construction:
- Buildings 4.8
- Furniture A/1.1, A/1.6, A/1.10, A/1.39, A/3.1, A/3.25–28

Consultants 4.7, 5.2, 5.48–55
Consumables 3.15, 3.30, 3.35, 3.41
Contracts:
- Administration 4.6, 4.8, 4.20, 4.23, 4.26–27, 5.59
- Law 4.5, 4.25
- LEA 4.15, 5.7, 5.17, 5.19–21, 5.43, 5.59
- Value 4.15

Curriculum Analysis 1.19–22

Daisy-chaining A/1.7
Deliveries 2.16, 4.2, 4.38, 5.7, 5.23–25, 5.28, 5.36
Dining Furniture A/1.51–52
Discounts 2.15, 4.36–37, 5.3, 5.9, 5.23, 5.26, 5.37, 5.51
Display boards A/1.60–62

Educational Development Plan 3.3, 3.5, 3.12
European Procurement Directive 4.5, 4.25
External F & E 3.37

ICT for F & E 1.4, 1.20, 2.2, 3.3, 3.18, 3.30–32, 3.41, 4.41, 5.55, A/1.12–13, A/1.22, A/1.27, A/1.43, A/1.64, A/1.67, A/2.16, A/2.18, A/4.8, A/4.11, A/5.8
Installation of F & E 2.16, 3.26, 4.2, 4.12, 5.39, 5.44, 5.46–47, 5.61–62, 5.67
Fees 5.4, 5.15, 5.50, 5.52, 5.54
Financial Stability 4.8, 5.62
Finishes:
- Worksurface A/3.16–22, A/3.29, A/5.8
- Edging A/3.17–18, A/3.23, A/5.6

Fire safety 1.17, 5.48, A/1.17–18, A/1.29, A/1.39, A/1.62, A/1.67, A/4.8
Fixed F & E 2.16, 2.18, 3.18, 3.20–26, 3.37–38, 3.40, 4.14, 4.31, 5.33, 5.39, 5.42, 5.44, 5.48–49, 5.51, 5.57, A/1.42–47, A/1.50, A/4.8
Funding Processes 3.5–16, 3.22, 3.27, 3.35, 4.33–35

Goods and Services Act 1970 5.8
Guarantees and Warranties 2.9, 2.16, 5.47, 5.62, A/3.26, A/3.30

Health and Safety 1.17, A/3.12–15, 4.5, A/4.4, A/4.8–10, 4.32, 5.48
Heights A/1.52, A/2.1–8, A/2.11, A/2.13, A/2.15

Image 1.9, A/5.1–2
Insurance 1.15, 4.19, 5.52
Interactive Whiteboards A/1.57

Layout Issues:
- General 1.5–6, 1.12, 1.17–18, 2.17–19, 3.5, 4.10, 4.12, 5.41, 5.45–46, 5.49–50, 5.54, A/1.29, A/1.37, A/1.45, A/1.49, A/1.53, A/1.57, A/2.22, A/2.25, A/4.1–4, A/4.11–13,
- Health and Safety A/4.8–10
- Planning Strategy A/4.7
- Sizes A/2.22–25
- Zoning A/4.5–6

Leasing 3.36, 4.32, 4.39, 4.41
Liaison Person 3.38, 4.27–31, 4.36, 4.38, 5.34
Local Education Authority Consultants and Architects 5.52–53, 5.56
Local Education Authority Purchasing Consortia 5.2, 5.9–25
Local Education Authority Services 2.3, 3.7, 3.19, 3,37, 4.3, 4.8, 4.15, 4.17, 4.21, 4.25, 4.34–35, 5.34, 5.43, 5.52, 5.59, 5.63, 5.68, A/3.15, A/4.4
Local Education Authority Supplies Department 2.15, 5.3–8, 5.22–25
Lockers A/1.39–41
Loose F & E 2.16, 2.19, 3.27–33, 5.48, 5.51, 5.57, A/1.1–41

Maintenance 1.15, 3.1, 3.9, 3.14, 3.17–18, 4.37, 5.48, A/1.1, A/1.11, A/3.16, A/3.29–31

Manufacturers 1.15–16, 2.2, 2.5, 2.8–10, 2.19, 3.25, 4.7, 4.20, 5.2–3, 5.5–7, 5.20–21, 5.24–25, 5.32–47, 5.49, 5.51, 5.61, 5.68, A/2.9, A/3.5, A/3.10, A/3.16, A/3.18, A/3.25–26, A/3.30–31
Mechanical & Engineering Services 3.25–26, 3.31
Modular furniture A/1.35
Multi-functional Furniture 1.7–8

New Build 5.67–68

On-line ordering 2.6

Paint finishes A/5.8
Plan Sizes of Furniture A/1.1, A/1.3, A/2.16–25
Planning/Layout Services 2.17, 4.10, 5.21, 5.31, 5.41, 5.46, A/1.53, A/4.4
Planning Strategy A/4.7
Positioning and Placing Service 3.39
Private Sector General Supplies Catalogue 4.7, 4.17, 5.2, 5.26–31, 5.57
Product Presentations 2.9, 4.22
Project Planning 3.32, 4.8, 4.10, 4.29, 5.15, A/1.49
Publications 2.12–13
Pupil fit of furniture A/2.5
Purchasing Route 4.15, 5.62–68
Purchasing Strategy 3.8, 4.1–32, A/3.4

Quality (general) 2.2, 2.8, 2.14, 4.2, 4.19–20, 4.38, 5.5, 5.32, 5.41, 5.60, 5.62, A/5.6

Revenue/Recurrent Funding 3.6–8, 3.14–16, 3.27, 3.34–35
Refurbishment 5.66–68, A/3.29, A/4.2
Re-Use of F & E 1.14–16
Royal Institute of British Architects 5.52

Samples 2.8–9, 5.5, A/1.52, A/3.16
Sanitary ware 3.26
School Buildings Development Plan 3.1–5, 3.12, 3.17–18, 3.33, 4.29, 4.32, 5.53
Screens A/1.63–67
Sinks 3.20–21, A/3.18
Small Equipment 3.32–33, 3.35, 3.41, 4.29
Specialist F & E 2.3, 2.9, 5.21, 5.40, A/1.2–3, A/1.6–13, A/1.47–53
Standards (general) 4.12, 5.5, 5.48, 5.60, A/1.28–29, A/2.8, A/3.1–11, A/3.25
Stools 5.36, A/1.26–28, A/1.51, A/2.11, A/2.15
Storage Organisation 1.11–13, 1.17, A/2.6
Storage Units 3.20, 3.28, A/1.3, A/1.30–41, A/1.50, A/2.24, A/3.2, A/3.25, A/4.11, A/5.6
Style 1.4–5, 1.17, A/5.3–6
Subcontractors 5.33, 5.44, 5.59, 5.61
Supply:
  Contractural Arrangements 5.25
  Direct 5.24
Stock 5.23

Tables:
  Computer A/1.12, A/2.16, A/3.26, A/4.11
  Dining A/1.51–53
  Frames A/1.4–6, A/1.8, A/1.51, A/3.25, A/3.30, A/5.6
  General 1.2, 3.28, 3.37, A/1.4–5, A/2.6, A/2.19, A/4.11
  Specialist A/1.2–3, A/1.6–13, A/1.35, A/1.49
Tendering 2.9, 2.15, 2.18, 4.5, 4.8–10, 4.12–26, 5.6–7, 5.17, 5.19, 5.41, 5.43, 5.49, 5.51, 5.60, 5.68
Terms and Conditions 4.42
Trade Associations 2.14
Trade Shows 2.1–3
Turn-Key Package 5.39, 5.68

Value For Money/Best Value 1.7, 2.15, 4.2, 4.4, 4.9, 4.16, 4.21, 4.35, 4.37, A/1.55, A/3.3 A/3.27, A/3.31–33
VAT 4.17, 4.33–35
Visits 2.10–11, 3.1, 5.5

Websites 2.6, A/3.1–2
Whiteboards A/1.38, A/1.54–57
Wire Management A/1.8–9

Printed in the United Kingdom for The Stationary Office
J003119, C20, 12/00, 5673.

102

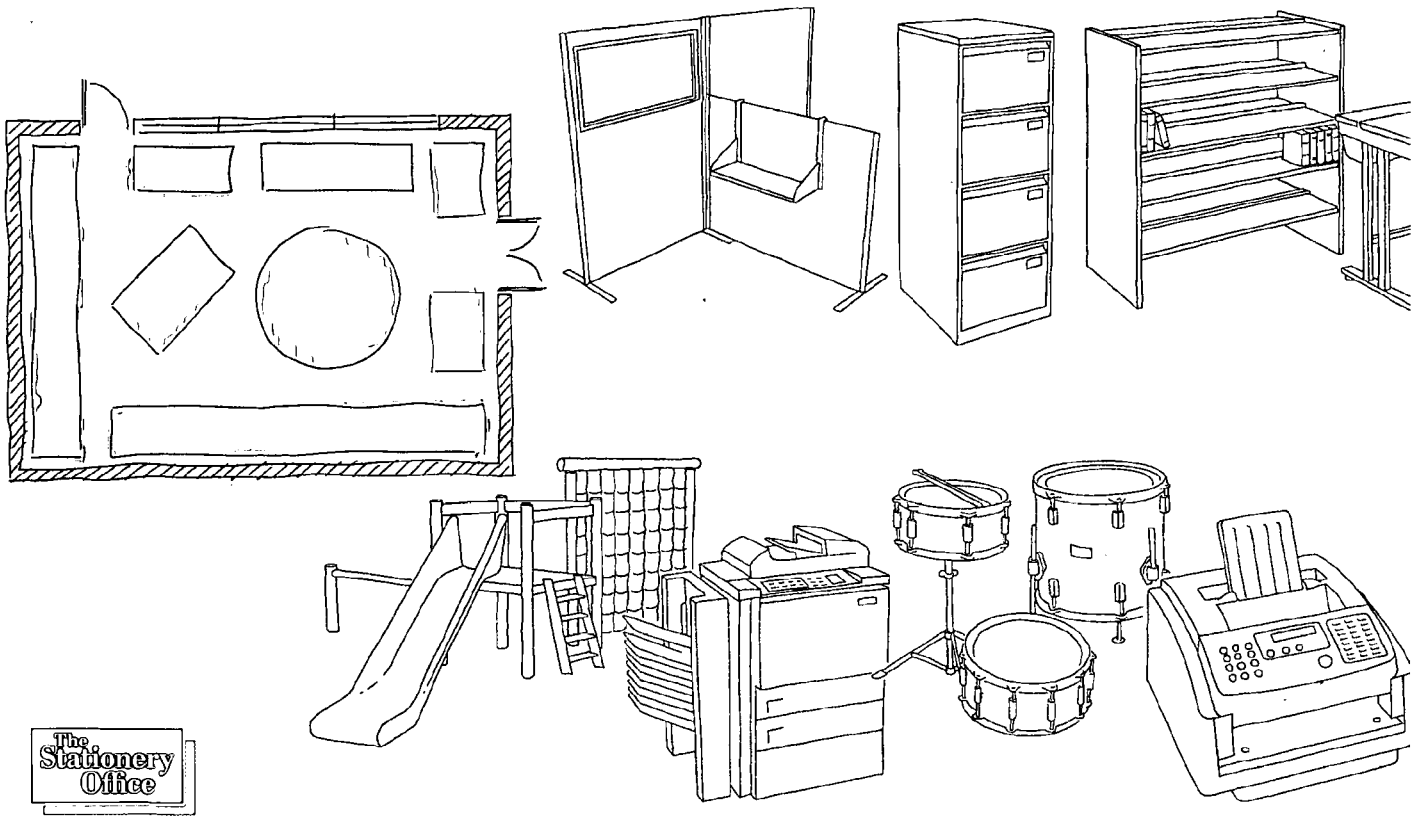

Published by The Stationery Office
and available on:
Tel 0870 600 5522
Fax 0870 600 5533
www.theStationeryOffice.com

ISBN 0-11-271092-1

9 780112 710929

£13.95

103

U.S. Department of Education
Office of Educational Research and Improvement (OERI)
National Library of Education (NLE)
Educational Resources Information Center (ERIC)

NOTICE

REPRODUCTION BASIS

☒ This document is covered by a signed "Reproduction Release (Blanket) form (on file within the ERIC system), encompassing all or classes of documents from its source organization and, therefore, does not require a "Specific Document" Release form.

☐ This document is Federally-funded, or carries its own permission to reproduce, or is otherwise in the public domain and, therefore, may be reproduced by ERIC without a signed Reproduction Release form (either "Specific Document" or "Blanket").

EFF-089 (9/97)