DOCUMENT RESUME

ED 411 144 SE 060 355

AUTHOR	Schiff, Paul D.
TITLE	Twenty/Twenty: Projects and Activities for Wild School Sites. An Ohio Project Wild Action Guide.
INSTITUTION	Ohio State Dept. of Natural Resources, Columbus. Div. of Wildlife.
PUB DATE	1996-00-00
NOTE	117p.
AVAILABLE FROM	Ohio Division of Wildlife, Education Section, 1840 Belcher Drive, Columbus, OH 43224.
PUB TYPE	Guides - Classroom - Teacher (052)
EDRS PRICE	MF01/PC05 Plus Postage.
DESCRIPTORS	Animals; Elementary Secondary Education; Environmental Education; Experiential Learning; *Habitats; Integrated Activities; Learning Activities; Outcomes of Education; *Outdoor Education; School Involvement; Teaching Guides; *Wildlife
IDENTIFIERS	Environmental Education Programs; Project WILD

ABSTRACT

This book presents 20 projects and 20 activities designed to encourage students and teachers to use the school site as part of an environmental education program with the focus on creating a place for wildlife. The projects and activities coincide with other materials from Project WILD and are easily adaptable by teachers at any grade level. The objectives of each project and activity focus on learner outcomes and hands-on application. They also provide opportunities for multi-disciplinary resources. No grade level, length of time required, or other limiting cross reference is suggested. Appendices contain warnings about potential hazards in the outdoors, diagrams for building nests, and a WILD School Site Application for Certification. Contains 34 references. (AIM/NB)

****
* Reproductions supplied by EDRS are the best that can be made *
* from the original document. *
****

ED 411 144

TWENTY/TWENTY

PROJECTS AND ACTIVITIES FOR WILD SCHOOL SITES

An Ohio project WILD

ACTION GUIDE

PERMISSION TO REPRODUCE AND DISSEMINATE THIS MATERIAL HAS BEEN GRANTED BY
R. Wolff
TO THE EDUCATIONAL RESOURCES INFORMATION CENTER (ERIC)

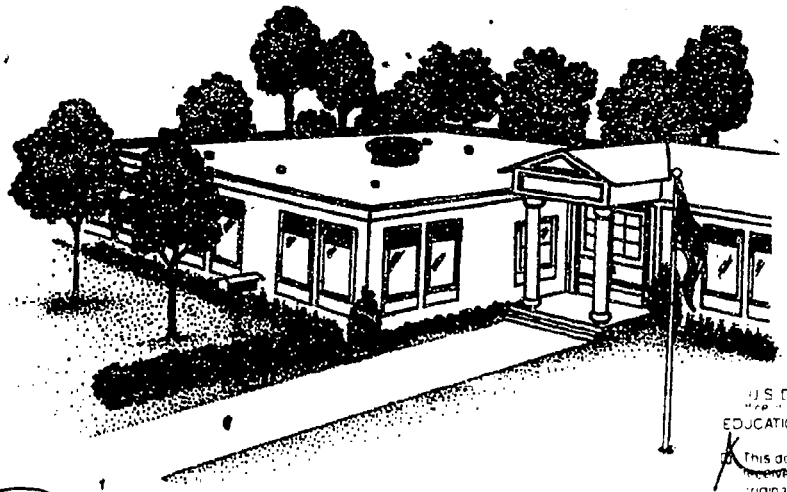

U.S. DEPARTMENT OF EDUCATION
Office of Educational Research and Improvement
EDUCATIONAL RESOURCES INFORMATION CENTER (ERIC)
☒ This document has been reproduced as received from the person or organization originating it.
☐ Minor changes have been made to improve reproduction quality.
• Points of view or opinions stated in this document do not necessarily represent official OERI position or policy.

Ohio Division of Wildlife

WILD SCHOOL SITE PROJECT

SE060355

BEST COPY AVAILABLE

TWENTY-TWENTY

Activities and Projects for WILD School Sites.

Written and compiled by
Paul D. Schiff

Edited by Lisa Smith
Illustrated by Cynthia Bishop
Designed by Chuck Greenwalt
Developed by the Ohio Division of Wildlife

Contributions by:
Sara Jean Peters
Mike Moutoux
Van Tea
Phil King
Marty McTigue

Special Thanks to
Diane Cantrell
Paul Knoop Jr.
Ohio Wildlife Federation

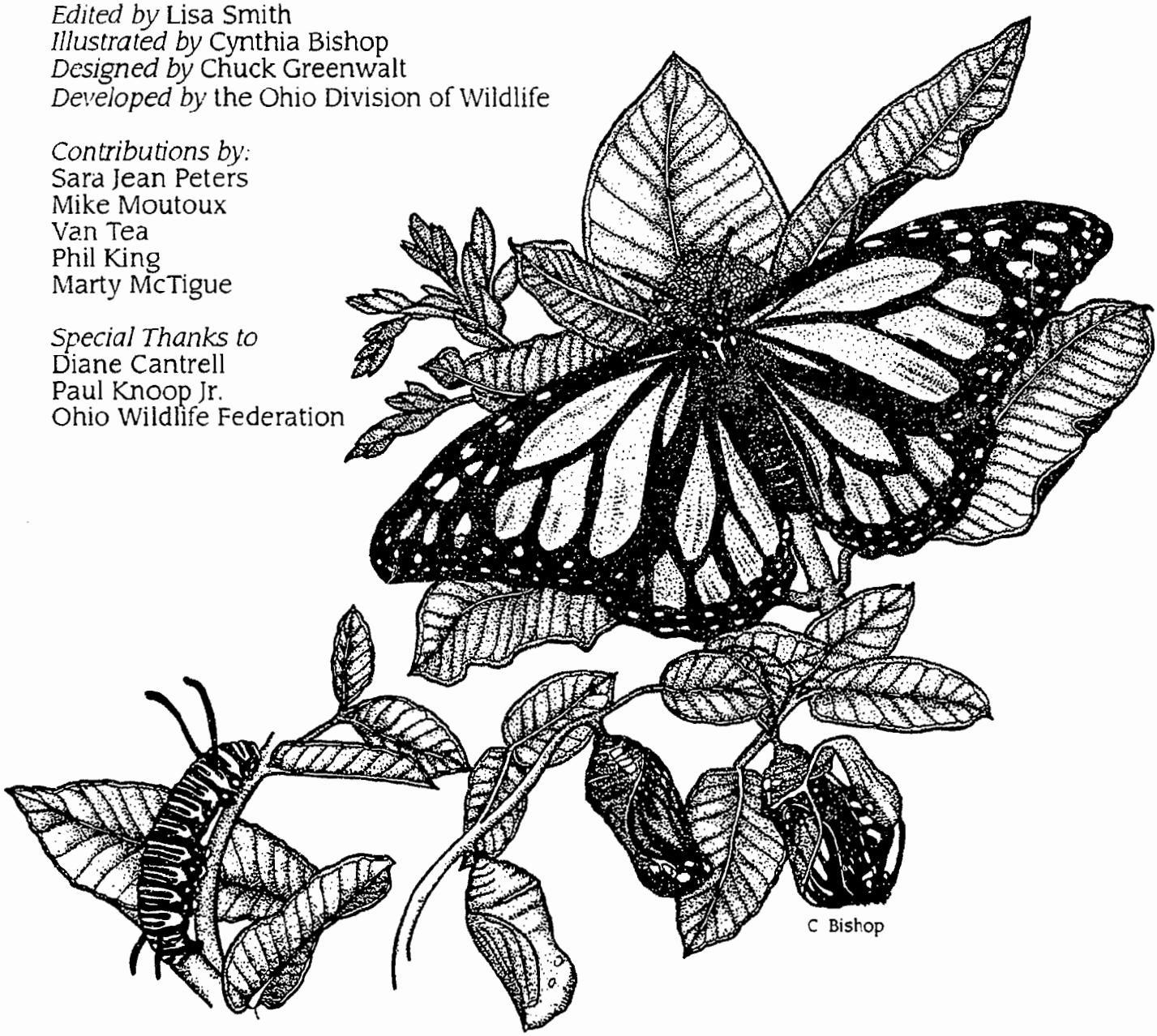

This project made possible with funding from the Do Something Wild, Wildlife Diversity Tax Check-Off and the Ohio Division of Wildlife.

FIELD TEST AND REVIEW BY:

John Agner; League of Ohio Sportsmen

William Baird; Shaker Heights Middle School

Kathy Balan; Tuscarawas Valley School

Pete Berard; Butler Co. Soil and Water Conservation District

Dan Bindofer; Columbus Recreation and Parks Department

Carl Bohn; Environmental Education Consultant

James N. Bull; Cuyahoga Valley National Park

Dan Burnett; Lake Metro Parks

Diane Cantrell; Division of Soil and Water Conservation, ODNR

Ann Cornell; Perry Co. Tribune & Scouting

Cindy Depillo; Columbiana Co. Litter Prevention and Recycling

Elizabeth Dunn; Valley Elementary School

Denise Ellsworth; OSU Regional Extension Education Center

Dana Fall; Maumee Bay State Park

Joan Gangle; Akron Zoological Park

Joyce Gottron; Austintown Township Park

Bob Haas; Shaker Middle School

Holly Halcomb-Utrata; Hamilton Co. Soil and Water Conservation District

Glenna Hoff; Washington Co. Soil and Water Conservation District

Joan Horn; Antioch University, Glen Helen Outdoor Education Center

Patricia Ivan; Prairie Lincoln Elementary School

Jill Kasai; Division of Parks and Recreation, ODNR

Amber Knowlton; Washington Co. Soil and Water Conservation District

Joyce A. Latura; Community Action Agency of Columbiana County

Rohn Lavender; Ohio Department of Mental Health

Sue Leidigh; Wayne Co. Office of Education

Annamae H. Lockhart; PIC Learning Center

Jenny L. Manuel; Racine Elementary School

Cheryl Mattevi; Kent State University, Salem Campus

Marty McTigue; Worthington Schools

Kelly Meadows, Division of Wildlife, ODNR

Nancy Moormann; St. Ursula Villa School

Teresa Mourad; Environmental Education Council of Ohio

Katrina Peterson; OSU Extension Service, Adams Co.

Linda Pettit; Franklin Co. Soil and Water Conservation District

Mary Raffel; Union Township Park District

Rhonda Rhyand; Upson Elementary School

Roberta J. Rice; Adventure Education Center, Canters Cave 4-H Camp

Joyce Ritchie; Racine Elementary School

Stan Rosenblatt; U S. Army Corps of Engineers

Jeanne Russell; Division of Soil and Water Conservation, ODNR

Elizabeth Schnabel; Medina Co. Soil and Water Conservation District

Donna Sessanna; Land Lab Coalition of NE Ohio

Susan A. Setterlin; Columbus Zoo

Barbara Singerman; Lake Metro Parks

Mary Spooner; Tayanoka Council Camp Fire

Debra Berry Spring; Recreation Unlimited

Michael Stewart; Warder Park Elementary School

Ken Strauss; Berea City Schools

Maureen Sullivan; Dayton Public Magnet Program

Nancy Tresky; Trumbull Co. Soil and Water Conservation District

Jennifer Vincenty; Environmental Education Consultant

Judy Walker; Canal Winchester Elementary School

Karen Walker; Salisbury Elementary School

Joan West; Kids Encounter Learning Center

Richard West; Lakota Local School

Barbara White; Lancaster City Schools

Tracy Winters; Athens Co. Soil and Water Conservation District

Marsha Zelein; Central Intermediate School

TABLE OF CONTENTS

Introduction 1

Preface 3

How to Use This Book 4

WILD School Sites and Project WILD 5

PART ONE, TWENTY PROJECTS

1. Beautiful Brush Piles 7
2. Perch and Plant 9
3. Animal Tracking Plot 11
4. The Feeding Station 13
5. There's Life in Dead Trees 17
6. Mower Less 19
7. Planting Trees and Shrubs 21
8. For the Birds 23
9. The Hummingbird Butterfly Garden 25
10. Sensational Succession 29
11. Food Plots for Wildlife 31
12. Water 33
13. Hedgerows and Corridors 35
14. A Haven for Herps 37
15. Perching Post 43
16. The Prairie Garden 45
17. Grit, Salt, Dust, and Mud 49
18. Squirrels, Bats, and Butterflies 51
19. Observation Blinds 55
20. Rocks and Boulders 57

PART TWO, TWENTY ACTIVITIES

1. Bird Nests 61
2. Rearing Butterflies 65

3. Making Sense 67
4. Wildlife at Home 69
5. The Belly Hike 71
6. Insect Safari 73
7. Tracks! 77
8. Seed Need 79
9. Aquatic Colonization 81
10. Seed and Sow 83
11. At the Bird Feeder 87
12. Color Me Safe 89
13. From Here to There 91
14. Cracks in the Sidewalk 93
15. Counting Critters 95
16. Reading the School Site 97
17. Web Watching 99
18. Water Wonders 101
19. Following the Seasons 103
20 Decay Relay 105
APPENDICES
Reality Check 109
References 111
WILD School Site Application for Certification 113
Nesting Box Plans 115
Wildlife Habitat Planting Stock Sources 119

INTRODUCTION

"Any child will tell you that the most important part of a nature outing is seeing wild animals."

Joseph B. Cornell
Sharing Nature with Children

The projects and activities included here are designed to encourage teachers and students to use and enhance the school site as part of a comprehensive, multidiciplinary environmental education program. A program that provides an arena for informed, constructive action to benefit wildlife, people and the school community.

The opportunity to apply learned wildlife conservation concepts on the school site can be the culminating experience of an environmental education program. Through an enriched curriculum that includes supplements like Project WILD, students gain an appreciation for should be an understanding of the needs and values of wildlife, and how people and their activities impact wildlife and the communities we share. As students gain in understanding, it is natural and appropriate that they choose to apply that understanding. The school site is the perfect place to start.

While neighborhood parks, nature centers or nearby natural areas provide an exciting place in which to learn, the school site itself, as close as the nearest exit, is the ideal outdoor classroom. No matter how urban or how small, the best outdoor classroom is your own school yard.

No field trip is required, few prerequisites need to be satisfied, it's an inexpensive and safe place to visit and it's uniquely yours. The school site itself is a real part of the school community, as important and full of potential as any classroom, laboratory or gymnasium.

These WILD School Site projects alone are not an outdoor classroom. They are, however, when effectively infused with planned, thoughtful outdoor classroom use and development, some of the most active and interesting outdoor classroom features.

WILD School Site projects should compliment an existing or planned initiative of educational program development and school site utilization. As part of a comprehensive environmental education program, WILD School Site projects offer unique opportunities to gain in understanding about natural resources, interrelationships and environmental issues while applying current, learner outcome oriented educational practices.

The focus of the projects and activities here is creating a place on the school site for wildlife. The simplest of these projects, for example a bird feeder, explored to its fullest, is simply an action extension of an understanding of wildlife conservation concepts. And the focal point then, for science experiments, creative writing, art and music, social studies, and more!

When the school community takes action to benefit wildlife, the school becomes a WILD School Site.

WHAT IS A WILD SCHOOL SITE

A WILD School Site is a "land lab", an "outdoor classroom", or any other outdoor school site program that includes projects with a theme. That theme centers on a focus of what people can do to help wildlife and the environment.

A WILD School Site may include all or any of these services and opportunities:

1.Teachers and organizers participate in a WILD School Site workshop where rationale, mechanics, projects, and activities are experienced.

2.A wildlife biologist or a WILD School Site consultant visits your site with suggestions and ideas.

3.WILD School Site planners visit an existing enhanced school site for a tour.

4.Teachers and students create wildlife habitat improvement projects at the school site.

5.The school applies to the Ohio Division of Wildlife for recognition as a WILD School Site and is awarded a certificate.

The WILD School Site is more than just a place for wildlife; it's a place for students. A place where the students plan, carry out and follow through with a project that gets great results.

The results extend well beyond the immediate goals of the project itself. WILD School Site projects can enhance confidence, build self-esteem, and increase decision making, critical thinking, and cooperative learning skills.

Getting students involved in school site projects isn't always easy--and it doesn't always work as you expected. But it can make a difference in how kids think and feel about their school, their community and their relationship to the environment. By encouraging students to take part in projects they care about, you can help them create positive changes--for their school, the community, the earth we share with wildlife, and for themselves.

If all this sounds worthwhile, the challenge then is to take a first step. While initially, the idea of an an outdoor classroom or a WILD School Site may seem a bit overwhelming, a practical beginning can be quite simple. A single berry-producing shrub planted with thoughtful application of its role as habitat , one bird feeder placed where students can observe its function, are simple, effective ways to begin. With this beginning, a WILD School Site will likely emerge, not all by itself, but with each action taken. Additional help, ideas and enthusiasm will soon be evident.

The real challenge for many, however, should not be how effectively you can create a WILD School Site, but rather finding ways to utilize the WILD School Site you already have. Every school site, as they exist now, offers challenges, opportunities and environmental concepts to explore.

The real first step, the boldest challenge: open the door and venture out. Pick an activity or a corner to explore and discover your WILD School Site.

"When we see the land as a community to which we belong, we may begin to use it with love and respect." - Aldo Leopold

PREFACE

The Division of Wildlife is the recognized leader of wildlife conservation efforts in Ohio. These efforts include research, management, enforcement, and creating opportunities to enjoy and participate in a variety of recreational opportunities.

Many of the agency's projects and programs have immediate, direct, and observable impact on Ohio's wildlife and associated recreation. These projects and programs are all linked to an exceptionaly thorough yet fluid strategic plan. This plan guides the agency as it strives to make a difference for people and for wildlife.

One long range goal emerges in almost every strategic plan chapter. That goal is education. Regardless of the impact we have today on a few acres of wetland or a few pair of nesting eagles, tomorrow's citizens must have the knowledge and skills required to make informed decisions and take appropriate constructive action to ensure a bright future for Ohio's wildlife.

WILD School Sites can be a training ground for that constructive action.

As today's school-aged children become tomorrow's decision-making citizens, the future of our natural resources is in their hands.

Some of the most important work that can be done today to ensure a bright future for wildlife tomorrow is in your hands.

Michael J. Budzik

MICHAEL J. BUDZIK
Chief, Ohio Division of Wildlife

HOW TO USE THIS BOOK

No single publication provides the best, clear and easy to follow guide to outdoor classroom development and utilization. The projects and activities here, in fact, should be considered only one step in a multi-step process. Other steps should include program development and utilization of the existing school site features.

The projects and activities in Twenty/Twenty, however, provide an easy to follow cookbook approach to basic, accomplishable enhancement and utilization ideas.

Twenty/Twenty is written for the teacher. No grade level, length of time required or other limiting cross reference is suggested. Each project and activity is intended to be easily adaptable. No sequence is advantageous. Which projects and what activities work best will depend on many things: season, weather, setting, and more.

Don't be intimidated by what at first may seem a complex task or concept. Take the basic idea, adapt it to your grade level, subject matter, and physical setting. That is what you're good at, leading learners; you don't have to be the expert.

The objectives of each project and activity focus on learner outcomes and hands-on application. And with a little planning, they can provide opportunities to use the school site as a multi-disciplinary resource, providing the setting for math, social studies, language arts, music, and of course, science.

The WILD School Site is a process, not something you create. Twenty/Twenty is a list of ideas, not a formula or template. You already have a WILD School Site, and we hope that this booklet provides additional ways to make it a sustainable part of your total program.

WILD SCHOOL SITES AND PROJECT WILD

An often neglected target within the education process is creating opportunities for students to apply what they've learned. Today, however, in classrooms all across the country, learners who have experienced a curriculum enhanced with Project WILD demand that experience. They want to do something, to take some action, to apply their understanding of concepts and to make a difference for people and for wildlife; the school site is the perfect place to start.

Project WILD activities (some of which are included here) result in a strong interest in applying knowledge. And in order for a WILD School Site to succeed, to be sustainable, student involvement is critical.

WILD School Sites can be considered an action extension of Project WILD. Of course, you do not need to be a Project WILD trained teacher to take advantage of all the outdoor classroom has to offer, but for those who are, the connection is obvious.

If you'd like more information about Project WILD and would like to participate in a Project WILD workshop, contact the Division of Wildlife office nearest you.

Several other important resources can help make the WILD School Site dream a reality. While even the simplest utilization or enhancement project is valuable, a comprehensive approach to getting the most out of your school site would include additional information.

These references would be exceptionally valuable. For information about their availability, contact the Division of Wildlife:

Habitats for Learning; Ohio Environmental Education Fund; includes a videotape, guide, directory, and workshops.

WILD School Sites; Council for Environmental Education; an introductory guide for planning and preparing school grounds.

School Nature Areas; Project WILD; video; an inspirational video program for teachers and students.

Taking Action; Project WILD; an educator's guide to involving students in environmental action projects.

Integrating Environmental Education and Science ; Ohio Environmental Education Fund; a guide for using and developing environmental learning episodes.

Homes for Wildlife ; New Hampshire Fish and Game Department, a planning guide for habitat enhancement on school grounds.

PART ONE

TWENTY PROJECTS

Many outdoor classroom resources list and briefly explain school site enhancement projects, things you and your students can do to create activity and learning centers on the school grounds. The next few pages expand on that idea, add a few more details to a basic recipe, and hopefully make it a little easier to visualize, plan, and implement selected projects.

The focus here is on wildlife habitat and projects that can be accomplished at almost any school site to benefit wildlife. While weather stations, outdoor seating, and trail development all have a place in many plans, projects that demonstrate the relationship between wildlife and the land can be some of the most active and educationally significant features of any outdoor classroom.

When wildlife benefits, students and the entire school community will too.

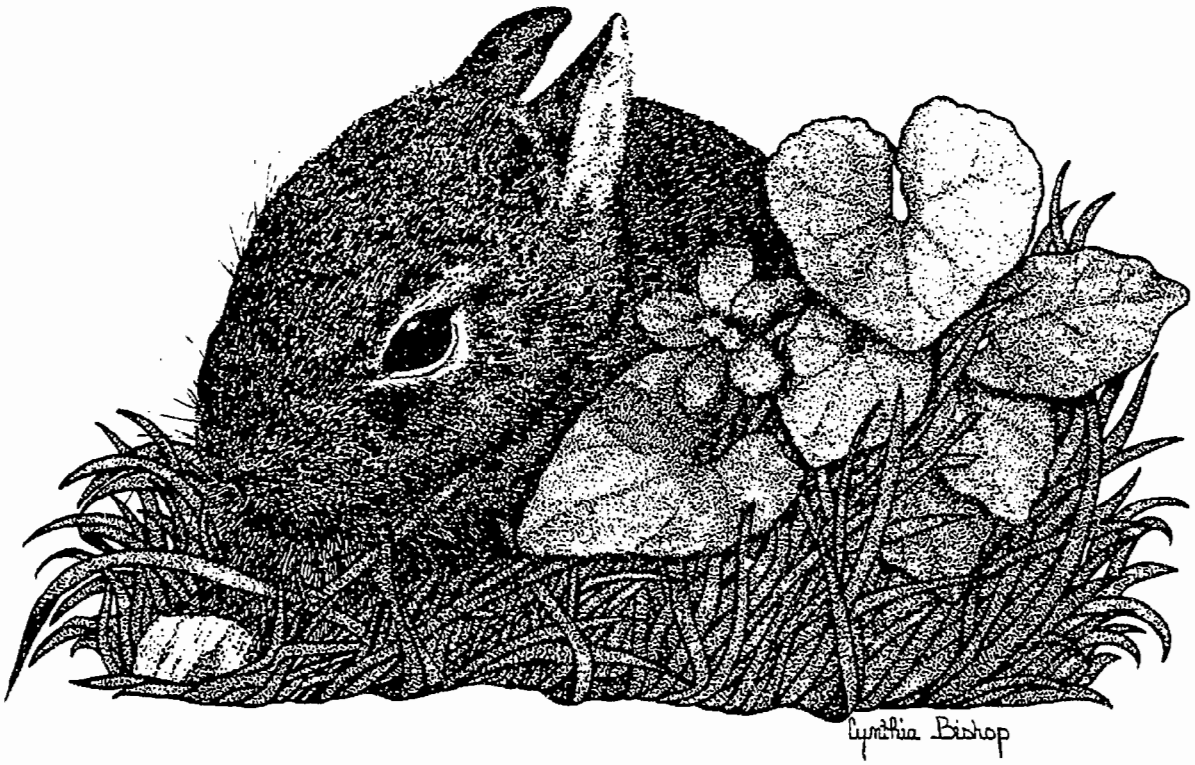

PROJECT ONE

BEAUTIFUL BRUSH PILES

Task:

Arrange brush (fallen or pruned limbs) in a neat log cabin-like pile, with the largest boughs on the bottom. Install drainage tile tunnels and passageways.

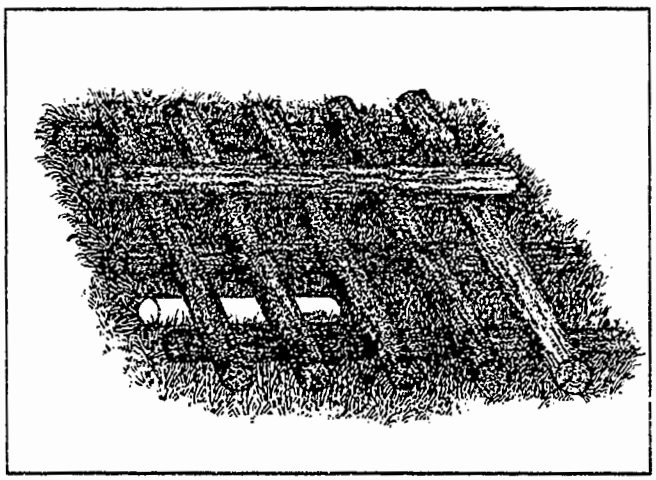

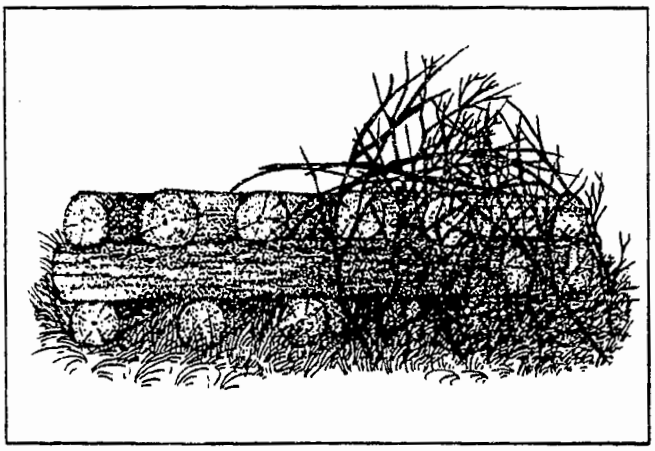

Results:

Small mammals and birds will use the brush pile for shelter.

Mammal tracks can be found entering the tunnels. Birds will use the brush pile as they wait in line to come to nearby feeders.

Discussion:

Brush piles are an inexpensive and easy way to provide shelter for small mammals and birds. While any pile of brush will provide some amount of cover, a well planned and effectively constructed brush pile will look less "messy" and last longer.

The raw materials are at hand when clearing or thinning any woodland or brushy area. Trimmings from landscape trees and bushes can be collected, old Christmas trees saved or perhaps a special outing planned to collect brush from an appropriate location and haul it to the WILD School Site.

A brush pile on the WILD School Site is most effective when it is constructed near other features, such as a food plot (Project 11) or feeding station (Project 4). A brush pile near bird feeders will greatly increase the number and kind of birds that visit the feeders. Drainage tile placed at the base of the brush pile in two to four foot lengths provides additional protection for small mammals.

Small logs or large boughs (salvaged wooden fence posts work well) should be placed in a log cabin-like design covering a four to eight foot square area. Construction should continue with smaller boughs and brush forming a mound-like pile three to five feet high. Christmas tree cuttings or similar brush can be used to "cap" the pile.

A pile of brush on the school grounds may appear unattractive to persons uninformed of its value. Placement near other features where its function can be easily observed might limit objections.

On large school sites, brush piles could be constructed at the edges of wooded areas or simply close to the source of materials.

As a brush pile matures, annual and perennial vines and plants will use the brush for support. Viney plants like bittersweet, honeysuckle or blackberry that grow up through the brush will add to its effectiveness and detract from its unsightliness.

Droppings from birds and other berry- and fruit-eating wildlife visitors may result in the establishment of desirable food-producing shrubs and vines in and around the brush pile.

Extensions:

1) Discarded Christmas trees can be "recycled" after the holidays.Trees can be tied in an upright position to metal posts or pipe driven into the ground, deciduous tree trunks or fence posts. Cut evergreens will provide cover for birds through the winter and will stay green for several months.

2) Brush piles provide dense cover which, when placed close to other features, increase the activity at those features. A brush pile near the perching wire (Project 2) or a tracking plot (Project 3) will contribute to the effectiveness of those features.

3) Living brushy cover, such as a growth of wild blackberry, should be preserved and maintained. Wildlife managers refer to these as "odd areas". Any corner, fencerow or idle ground, providing naturally occurring dense cover, is a feature that benefits wildlife greatly.

4) Baking flour sprinkled over the ground at a drainage tile entrance to a brush pile will show the tracks of any wildlife visitors.

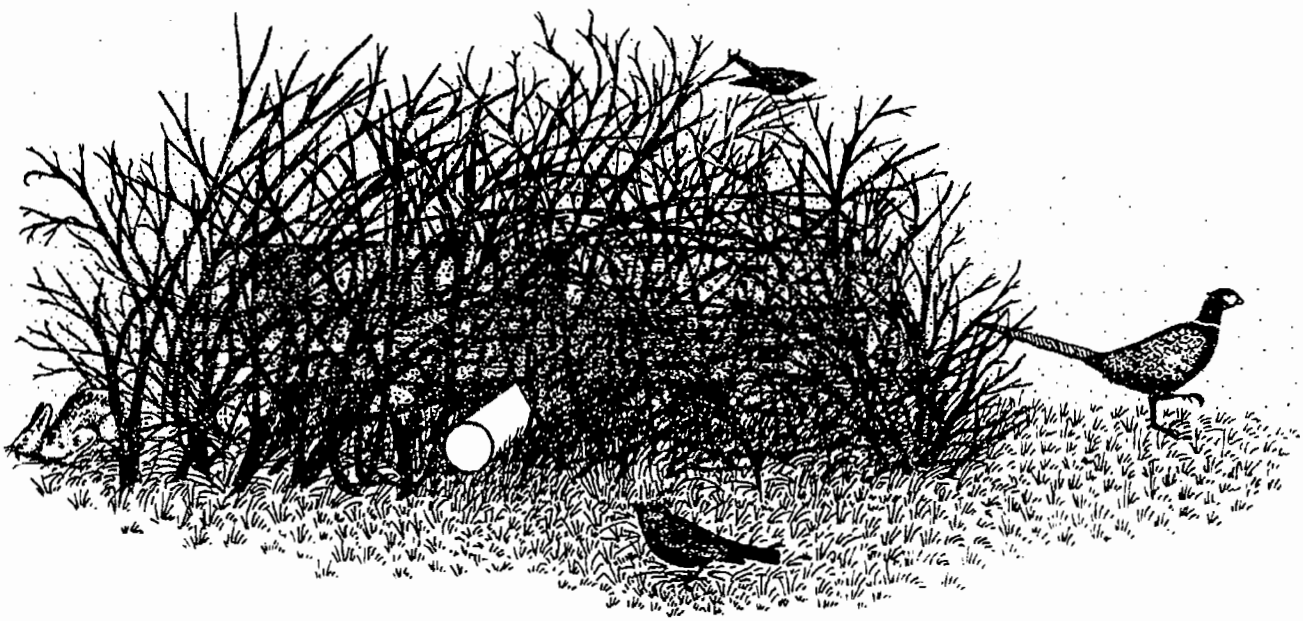

PROJECT TWO

PERCH AND PLANT

Task:

Erect a fence-like wire and posts over a strip of tilled ground as a perching place for birds.

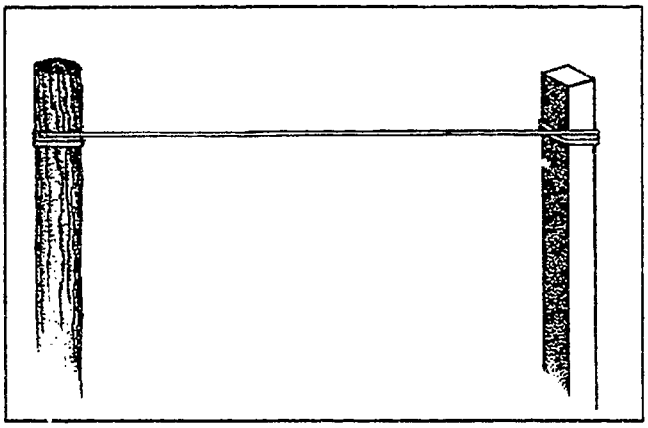

Result:

As birds begin perching on the wire, their droppings will be planting many different types of seeds. Seeds allowed to germinate and mature provide information on seed dispersal (Activity 8) and what food birds eat.

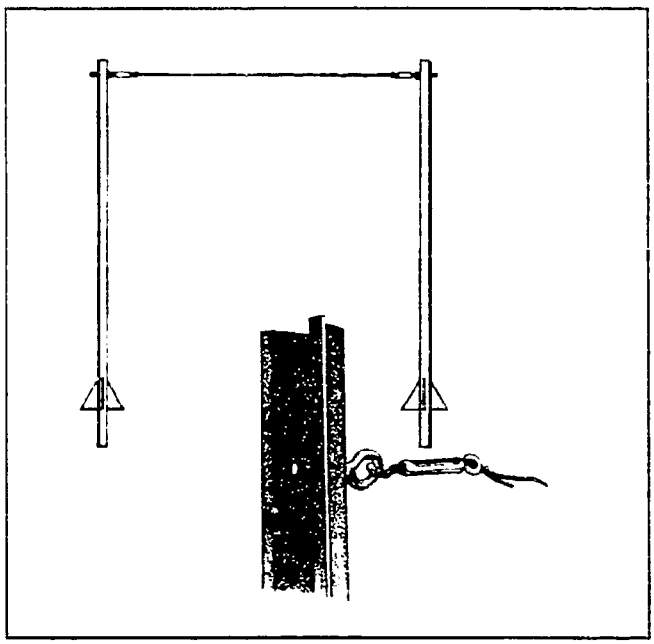

Discussion:

Old fencerows are often overtaken by trees, shrubs and vines. How did they get there? This simple project allows you to see how a fencerow develops and provides a perching area where visiting birds can be observed and studied.

All vegetation should be cleared from a strip of ground about 3 feet wide and 10 feet long. If practical, remove any sod and work the area with a rototiller.

The simplest system would be to erect any salvaged, recycled fence post or similar support at each end and stretch a clothesline between the posts.

A more elaborate, semi-permanent system could be developed with channel posts (driven into the ground), eyebolts, turnbuckles, and heavy gauge wire.

Salvaged black locust fence posts or purchased treated 4- by 4- inch posts can be substituted for the iron channel posts. The larger diameter wooden fence posts double as support for the wire and perching platforms for bird species that prefer a post to the wire (Project 5).

If a single wire or rope is used, it should be four to five feet above the ground. Two wires or ropes may be used to provide additional perching options at three to four and five to six feet above the ground.

It won't take long for plants to begin growing under the wire. By keeping track of what birds are observed on the wire and what types of plants are growing, students can discover what types of foods the birds prefer and what seeds are distributed in the birds' droppings.

Extensions:

1) As your model fencerow matures and woody vegetation begins to take over, you may want to extend the wire in a linear path. Perching wires could be studied at different ages from one growing season through several years of succession (Project 10). Many of the plants, as they mature, will begin to provide food and cover for visiting birds as well.

2) Seed dispersal is an interesting WILD School Site study. The "perch and plant" will demonstrate one role wild animals play in seed dispersal and focus on the adaptations of plants that provide for this method of distribution (Activity 8).

PROJECT THREE

ANIMAL TRACKING PLOT

Task:

Clear an appropriate area three feet by three feet or larger of all grass and vegetation and fill with clay soil. Use a variety of baits to attract wildlife to the area.

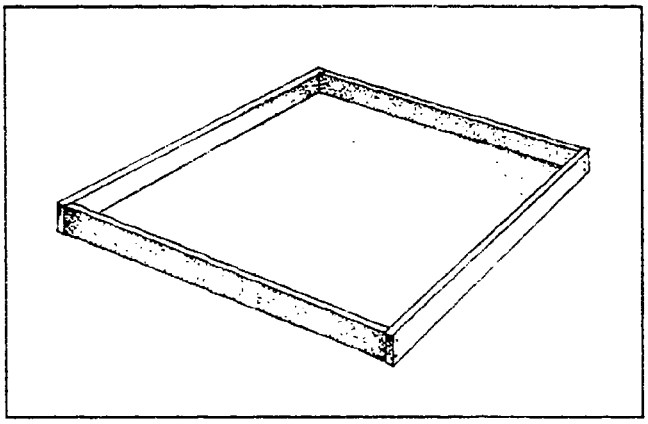

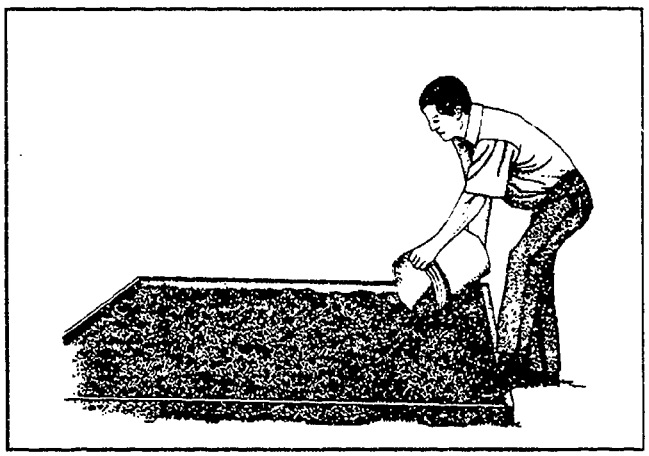

Result:

Regardless of where your school is located, you can attract many species of wildlife that will leave their tracks for you to study.

Discussion:

Students will be surprised by the variety of wildlife that might leave their tracks in the soft, moist earth of a baited tracking plot. Even students at urban sites can study the tracks of birds, mice, squirrels, rabbits, opossum, raccoons, and sometimes deer.

The simplest tracking plot requires no actual construction. A cleared area should be covered with clay soil two to three inches deep. The clay should be raked smooth and moistened so that it is soft enough that visiting animals leave a clear impression.

Food scraps, grain, dog or cat food, or other suitable "bait" should be placed near the plot regularly to attract wildlife to the area.

You may have to experiment with locally available clay, clay/soil or clay/sand to see which is easiest to handle and works well to retain an impression. It takes quite a lot of clay to fill a tracking plot; you can figure on about three gallons per square foot.

The tracking plot will have a neater appearance and be more easily maintained if it is "framed" with suitable lumber. Treated two by four inch or four by four inch deck lumber can be nailed together and buried level with the surface of the ground. The area within the frame is then dug out and filled with clay.

If your school site has, or is near a field or stream, you can go track hunting without the benefit of a tracking plot. Any spot that's fairly level with soft, fine-textured soil could be a place to check for tracks. The best places to look are near water or along a well-worn trail. Larger animals will use more open areas, while a very small cleared spot under some bushes may reward you with many different little tracks of mice, shrews or chipmunks.

Extensions:

1) Tracks may be "collected" and a permanent record made of wildlife visitors. To collect a track, use plaster of Paris to fill a temporary mold form constructed around the track (Activity 7).

2) Permanent tracks for comparison can be a part of this feature. Pour a three by three foot concrete pad next to the tracking plot. Before it hardens, make various tracks in the concrete using preserved animal feet or rubber or plaster casts of tracks. The casts may be purchased through biological supply houses.

PROJECT FOUR

THE FEEDING STATION

Task:

Place a variety of feeders for birds and other wildlife near plant cover and where there is an opportunity to observe the wildlife that visits.

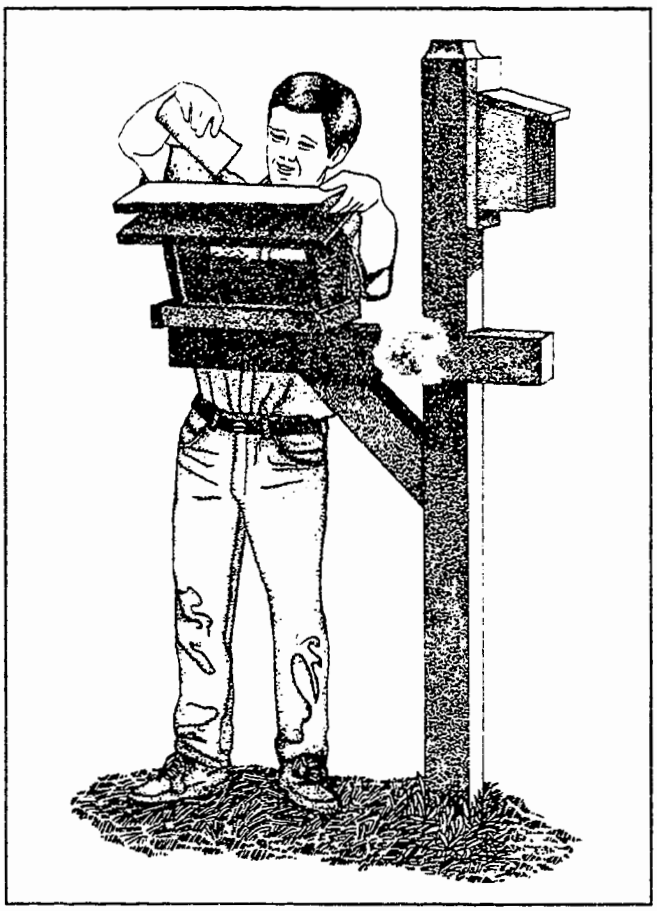

Result:

As opposed to a single bird feeder, a feeding station provides for the needs of a variety of birds and wildlife. By providing an appropriate arrangement of feeder styles and different kinds of food, and by including plant cover and water, the variety and number of birds and small mammals that visit the area can be increased.

Several feeding stations at various locations around the WILD School Site will provide for the greatest variety of wildlife.

Discussion:

There are many different types of feeders commercially available. Making your own, from extensive woodworking projects to simple craft projects using household materials, can be fun and effective.

While feeding birds and other wildlife is rewarding and educational, the greatest long-term benefit for students and wildlife would be to incorporate the planting of food-producing plants (shrubs, trees, grain) along with providing feeders.

Many people feed birds during the winter months, yet additional benefits both for birds and people are offered by providing food all year long. Young birds will visit with their parents in the spring and summer and a variety of seasonal plumages can be observed in common birds throughout the year.

Birds have definite preferences for the kinds of food they like and how they like to eat. Some birds prefer grain and seeds, some fruit, others are attracted to animal fat (suet). Different birds prefer to feed at different heights, from grain scattered directly on the ground to platforms or feeders elevated on posts or in trees.

The more variety you provide, the greater variety of birds you can attract to your WILD School Site feeding stations.

A critical point in planning a feeding station is to ensure that there is protective cover nearby. Shelter provided by brush piles (Project 1), evergreen trees, shrubs, and bushes serves as a staging area as birds wait in line to visit the feeder. Dense cover also provides protection from weather and predators.

In addition to feeders for birds, simple feeders can be provided to attract squirrels

and chipmunks. While their presence at an urban bird feeder is often a nuisance, if squirrel feeding is incorporated into a planned, maintained feeding station, it is fun and educational.

The following suggestions, tips and illustrations may help you plan your feeding station.

Commercial wild bird seed mixtures may not be the most economical or effective mix to provide for seed eaters. A mixture of black oil sunflower seeds (50%), white proso millet (30%), and cracked corn (20%) is a simple and appealing recipe for many midwestern birds. The grains are available at most grain elevators and feed stores.

A variety of feeders at a various elevations should be included. Feeders designed to dispense a single type of food, such as tube thistle feeders and basket or cage suet feeders are effective.

Simple platforms either raised on a post or near the ground provide easy access. However, the grain must be replaced when wet or snow covered. Platform feeders with roofs keep food dry and available.

Grain simply scattered on the ground near cover provides for many species.

Dispenser-type hopper feeders have the advantage of storing food to be dispensed as needed, requiring less maintenance.

The more "sheltered" your feeding station location the better. Strong winds and open spaces will discourage birds from visiting.

Invest in a library or visit a book store and select texts on bird feeding and bird feeder designs to increase your knowledge and add to your enjoyment and success.

Water projects are discussed separately (Project 12); however, be sure to include water, even simple homemade or purchased "bird baths", at your feeding station.

Locate a feeding station or individual feeders where they can be easily observed. Bird feeding is intended as a "people" project as much as a wildlife management project. The real joy of bird feeding comes from watching, not just feeding. Many feeders can be located near classroom windows. Windowsill feeders provide a very close-up experience.

Bird feeding and watching are among the most popular wildlife hobbies. There are dozens of good books and references that deal in great detail with observation, feeding, and study.

As simple and rewarding as a feeding station can be, be aware there are potential obstacles and problems. Local stray cats and hawks may prey on visitors, birds fly into windows, and less desirable birds and mice can appear, creating minor setbacks in an otherwise rewarding project.

Extensions:

1) At some school sites, cattle fence bins to hold ear corn can be constructed and placed to provide food for pheasants and deer.

Supplemental feeding of deer with the intent of having an impact on winter survival is not recommended. These projects should function only to bring wildlife into the feeding area for observation and study.

2) An observation blind (Project 19) is an appropriate addition to the feeding station, especially feeding stations located away from the classroom windows. There is a different kind of enjoyment that comes from watching birds from a blind out in the elements, in the birds' world.

3) If you're lucky enough to have a pond on your WILD School Site, a floating tray, holding whole grain corn, becomes a feeding station for ducks. The pond's shore, near

a feeding tray, is a great place for an observation blind.

4) Experiment with different grains to determine the favorite food of frequent visitors. (Activity 11)

5) Keeping notes or at least an ongoing list of visitors, or a list by month, by year or season is an important and helpful extension. It helps students look more closely and think more carefully about what they see. It will help them learn to identify new birds and add to what will surely become a life-long hobby for many WILD School Site citizens.

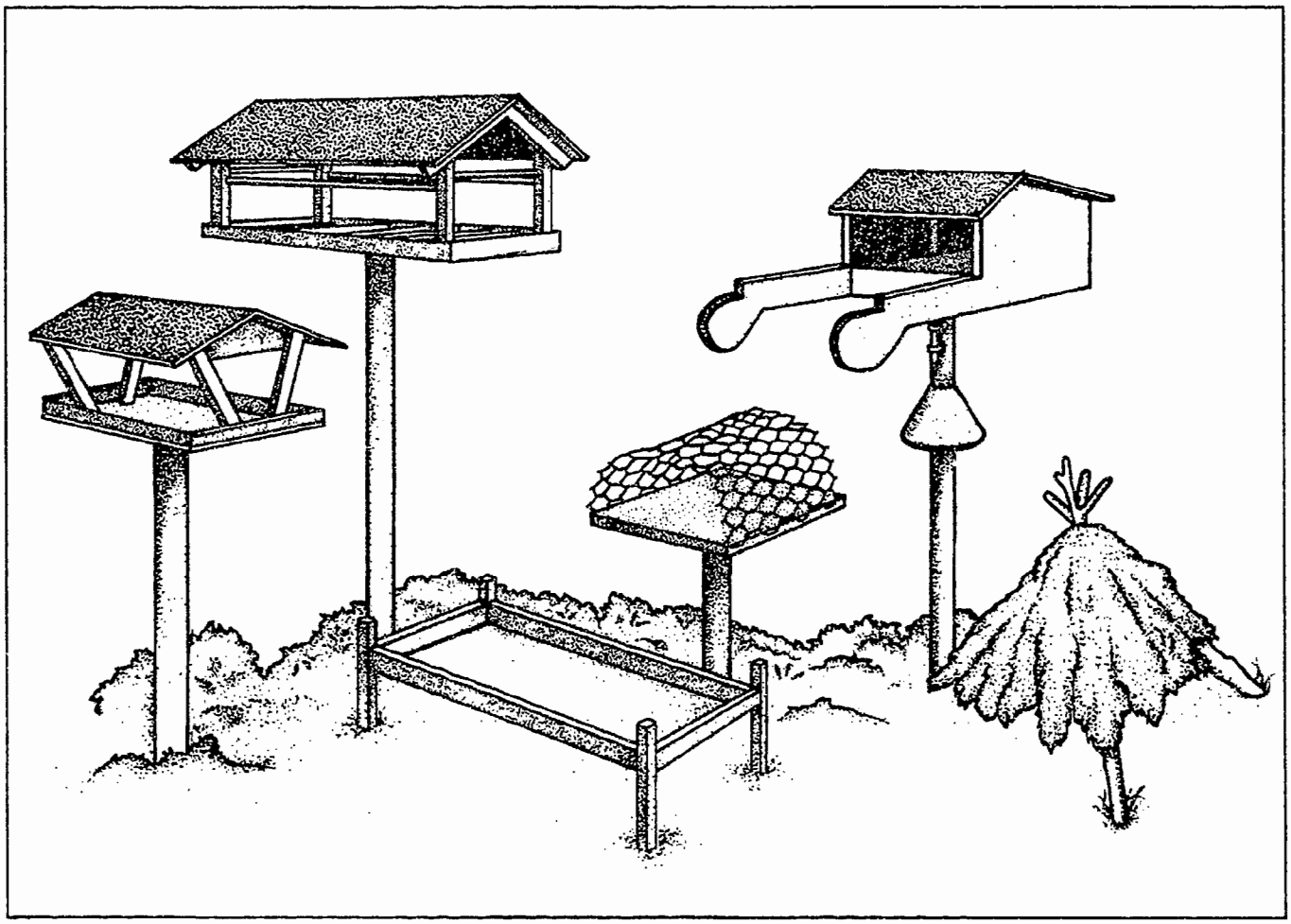

PROJECT FIVE

THERE'S LIFE IN DEAD TREES

Task:

Select and relocate fallen and/or standing dead trees to the school site. Or identify a dead or dying tree on or near the school site for study that can be used as an activity center.

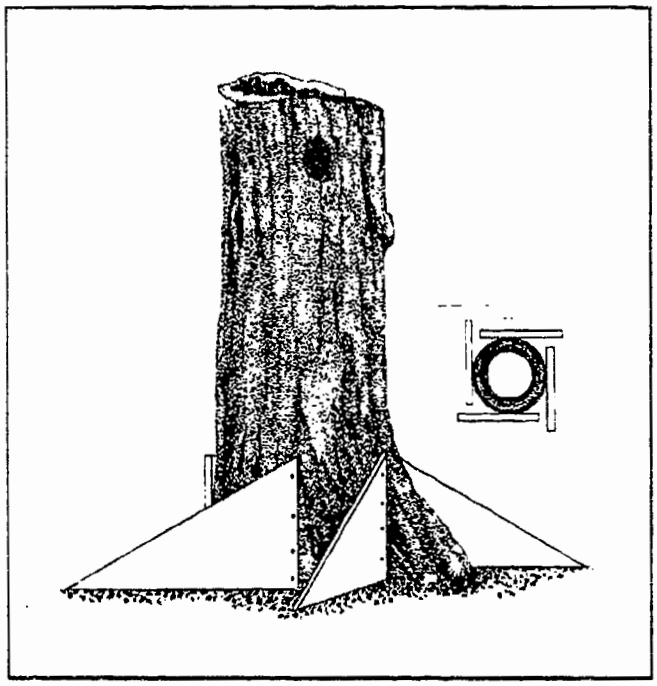

Result:

A rotting log can be the center of all kinds of activity. Students can examine the rotting log for plant growth and animal activity and find evidence of decomposition. As it ages, the plant and animal activity in and around the log will change.

Students can explore the interactions between rotting logs and nearby plant and animal populations and their benefits to the ecological community.

Dead, dying, and hollow trees with crevices and cavities provide food and shelter for all kinds of wildlife. Increased numbers of wildlife will come to your WILD School Site attracted by the trees and logs and may even stay to nest in existing cavities.

Discussion:

Fallen tree trunks and stumps in various stages of decay; standing dead, dying or hollow trees; trees with cut tops; and trees with visible cavities or nests are remarkable landscape features worth preserving. For the WILD School Site, they are worth creating.

Dead trees are a forest landscape feature the value of which has often been overlooked. Standing dead trees are sometimes selected for firewood or cleared for forest enhancement. Today, however, many forest managers preserve these valuable wildlife homes.

It is a relatively low-cost project to bring one or more tree trunks to the WILD School Site and place them appropriately. A shaded, moist location should be selected where possible. Tree trunks should be eight inches in diameter or larger. Several tree trunks, in different stages of decomposition, will maximize the study opportunities.

Appropriate logs or fallen trunks can be located in almost any woodlot. You should consider that removal and transportation of these features, or even study once they are in place on the school site will have an impact on the wildlife currently using the log. While you may be creating new homes for wildlife, as with any alteration to the environment, you will be destroying the habitat of others. Disturbance to any ecosystem feature should be minimized when possible.

It may sound impractical to move a standing dead tree. But featured in relationship to a fallen, rotting log, the standing hollow tree trunk is worth considering.

The transplanted dead tree trunk need not be large or very high to be worthwhile and effective. The method by which the tree is placed and anchored will depend on how

large a tree is selected. A partially hollow tree trunk four to eight feet high with visible cavities is relatively easy to secure by burying the base or constructing support braces like those of a large Christmas tree stand. Make sure the trunk doesn't have a top or branches that might fall and injure someone.

Extensions:

1) If you're fortunate enough to have a pond, stream, or wet area at your school site, a fallen log placed at the water's edge and partially immersed becomes a "turtle log". Frogs and turtles will readily use the log for a resting and feeding platform.

2) ANIMAL INN is a national public education campaign to conserve, through value awareness, specific kinds of dead, hollow or fallen trees for wildlife and fish habitat. It collaboratively involves the USDA Forest Service, USDI Bureau of Land Management, state agencies, the forest products industry and conservation organizations. Information materials are designed for use across the country for a variety of audiences. Contact ANIMAL INN, U.S. Forest Service/BLM, P.O. Box 7469, Bend, OR 97708-7469.

PROJECT SIX

MOWER LESS

Task:

Select a portion of currently mown lawn, 100 square feet or larger, and refrain from mowing it, allowing grass and wildflowers to mature.

Result:

An unmown plot, even a small one, provides an amazing variety of study topics and discovery opportunities. As grasses, weeds and wildflowers mature, they provide increased diversity in the plant community which provides increased diversity in the kinds of wild animals that might utilize the site.

Discussion:

Staying off the mower has a dramatic impact on wildlife dependent upon grassland. Many familiar species, including the ring-necked pheasant, cottontail rabbit, meadowlark, and bobolink, require grassy fields that include some of the previous year's thatch or dead grasses in which to nest and rear young. In addition, grass fields provide the critical cover for small mammals, such as the meadow vole. This small mammal is a prey species in the food web that includes predators such as the Ohio endangered barn owl.

While a small unmown plot will have little impact on the local population of these wildlife species, this demonstration plot can illustrate what can occur on a larger scale.

Depending on the size and location of your unmown plot, there will be increased activity from butterflies, spiders, small mammals, and a host of invertebrates which in turn attract larger organisms within the food web.

The best location for an unmown plot will depend on several factors. We mow because we have been taught to see a manicured lawn as aesthetically pleasing. So appearance, or the opportunity to ensure compatibility with the remainder of the school site, is important. Full sun will be helpful in ensuring seasonal maturity of wildflowers and grasses. The plot should be easy to access and explore. Most likely the lawn around the plot will require routine mowing, so this task needs to be considered with input from maintenance personnel. A mowed path, dividing the plot into two or more sections will make it accessible for closer study without tramping down tender plants that are developing in the study area.

Selecting and marking off the area and conferring with maintenance staff are the only tasks associated with this project. Once mowing has been discontinued, the plot will develop on its own and require little additional work.

A sign, designating the plot as a study site, should help forestall any misconceptions about what's going on.

There are several management options once an annual plot is established. One would be to mow the plot in late summer and begin a new plot again next year.

Better still, allow the plot to stand during the winter months as food and cover for birds and small mammals. Mow the plot in early spring prior to the start of new growth.

Or the plot could be allowed to mature for several years while plant succession is studied. Plant succession and successional plots, however, are a separate activity (Project 10).

Extensions:

1) Some plants we know as weeds are used by a large number of wildlife species. Plants such as dandelion, pigweed and vetch are heavily used by wildlife. These plants and their roles can be studied within an unmown plot.

2) Some weeds are defined by the official classification of "noxious". Weeds such as Canada thistle, velvet leaf, and burdock are considered agricultural nuisances. Any idle or unmown area is sure to present an opportunity to identify and discuss noxious weeds.

3) A wide variety of grasses makes up the average lawn. With the help of a taxonomic key, the grasses of the WILD School Site, some native and some cultivated, can be identified and studied.

4) As an unmown plot matures, new organisms will appear and a new community will emerge. The occupation of an area by a group of organisms that were not previously there is called colonization. Colonization of an aquatic site is another WILD School Site opportunity (Activity 9).

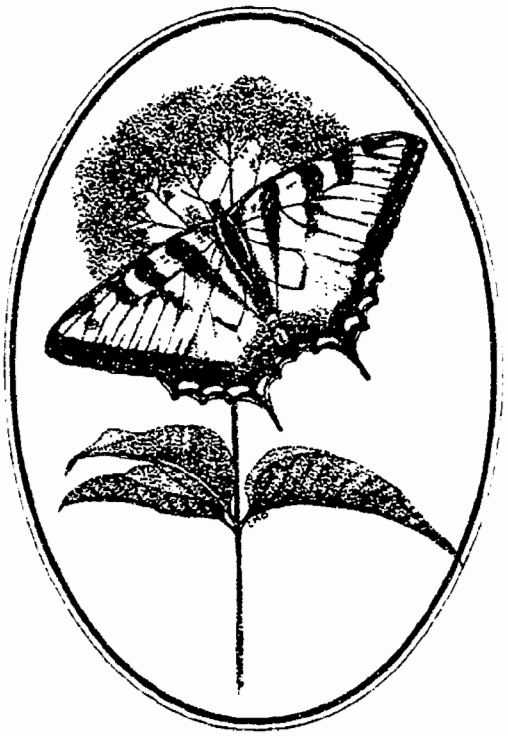

PROJECT SEVEN

PLANTING TREES AND SHRUBS

Task:

Select and plant trees, shrubs, and vines of value to wildlife that provide aesthetic and utilitarian benefits.

Result:

Food and shelter requirements for many wildlife species are provided by planting trees, shrubs, and vines.

Discussion:

All wild animals have the same basic needs for survival: water, food, and shelter. These are all necessary elements of an animal's habitat. On or near many school sites, water is available in sufficient amounts for wildlife through natural sources. However on most sites, the food and shelter requirements of many animal species are not met. Typical school site development often limits the quantity and quality of wildlife habitat.

The best way to increase the number of wildlife visitors to the school site is to establish wildlife habitat. Food and shelter requirements of many wildlife species can be provided by planting trees, shrubs, and vines.

Planting for wildlife may be as simple as planting a few trees and shrubs or as extensive as a habitat development plan covering several acres. No matter what the size of the school site, the goal is the same—to provide habitat for wildlife.

To ensure that the plantings will provide maximum benefits to wildlife, proper planning, planting, and maintenance are necessary.

Wildlife plantings can also serve as windbreaks, hedgerows, sight and sound barriers, shade producers, and erosion controls.

WHAT TO PLANT

When choosing plants for a habitat planting project, you should consider several things: 1. which animals you want to attract; 2. which animals normally occur in the area and what their specific habitat requirements are; 3. what purposes, other than wildlife habitat, the plantings are to serve; and 4. which plants will do well on the school site.

The type of wildlife you can attract will depend on two factors: which animals are native to the area and the current land uses in the vicinity. For example, bluebirds may be plentiful at rural school sites and easily attracted. City school sites in the same county, however, should not expect to see bluebirds because bluebirds prefer open habitats.

To attract and hold the desired animals, you must provide food and shelter year-round. In general, the greater the habitat diversity, the greater the variety of wildlife that will be attracted to the school site. A diverse habitat is more likely to provide for the needs of wildlife year-round. The following table shows trees, shrubs, and vines that can be planted in Ohio to benefit wildlife. Included is information on food and shelter value, soil and light requirements, and the origin of the plant (native or nonnative).

When selecting plants, consider what other uses the planting might serve. Evergreen trees that furnish year-round cover for wildlife are also useful in windbreaks and screen plantings. Some berry-producing shrubs have attractive flowers and can be planted singly or in hedgerows. Various nut producing hardwood trees provide shade and have timber value. Shrubs with extensive root systems help hold soil in place. Fruit-producing vines grow in areas of limited space.

WHERE TO PLANT

Where the plants are located can be as important as what species are planted. In general, it is best to have food and shelter plants next to one another. A shrub that is loaded with berries is more likely to be used by wild animals if it is near protective cover such as evergreen trees.

Other considerations in choosing the planting site are: 1. the size of the plants at maturity—plants with branches that will be wide-spreading should not be located too close to buildings, driveways, or other plants; 2. sun loving plants shouldn't be planted in partially wooded lots; 3. plantings shouldn't occur around utility easements, under or over wires, cables, or pipelines; 4. soil conditions—if soils are wet and low in fertility, don't plant species that require well-drained fertile sites; and 5. plant compatibility—the plants chosen should look good and grow well together.

WHEN TO PLANT

Time of planting depends on the plant species chosen and the size of stock used. The size of stock will depend on the amount of time and money you wish to invest and how anxious you are to see results.

Seedlings are often only 6 to 24 inches tall and are usually sold as bare-root stock (i.e., the packaging doesn't include soil). Plantings are made as soon as the ground thaws in spring. In Ohio this is usually during the first part of March. Most seedling stock can be planted through May.

Larger stock is usually obtained with the root system surrounded by the soil in which it grew. It is often wrapped in burlap or placed in a container. This more mature stock can be planted in spring or fall. Fall plantings can be made as soon as the weather starts to cool and/or the plants become dormant (late September). Planting time continues until the ground freezes. Spring plantings should be done as soon as the ground thaws.

MAINTAINING YOUR PLANTINGS

A properly maintained wildlife planting will increase plant growth and produce the optimum food and shelter for wildlife. Watering is usually not necessary or practical for bareroot stock planted early in the spring.

Young plants can be protected from unwanted plant competition by mulching and mowing. Mulching is practical only for plants put out in small numbers. Commercial mulches such as peat, bark, straw, wood chips, and plastic can be used. Home mulches such as leaves, grass clippings, and garden compost can be used as well.

Fertilizing young plants is not recommended. If not properly applied, fertilizers can burn the plants. They also may encourage the growth of competing vegetation. An increase in plant growth will seldom justify the cost of fertilizers.

SUMMARY

When making plantings for wildlife, keep the basic needs of food and shelter in mind. Plan your habitat development projects well and don't take on too much at one time. Develop a planting plan to cover a period of several years. Do a little each year. Then spend the rest of the time enjoying the wild animals that are attracted to your school site.

PROJECT EIGHT

FOR THE BIRDS

Task:

Construct and/or purchase and erect artificial nesting structures, "bird houses," for cavity-nesting birds.

Result:

Many species of common birds will nest in bird houses. These structures can attract birds into areas where they can easily be viewed and studied as they set up housekeeping and rear their young. Keeping records of nesting success is enjoyable and educational.

Discussion:

Many Ohio bird species nest in cavities. Some excavate their own holes while others move into existing hollows in trees. In much of Ohio, natural cavities are too few to provide optimum nesting opportunities. Trees with hollows are often the first to be removed from woodlands when firewood is cut or timber stands improved (Project 5). Old wooden fence posts, which once provided nesting holes for species such as the Eastern bluebird, have been removed or replaced with steel posts. Without adequate nesting cavities, areas that otherwise have good habitat will support only a limited number of Ohio's cavity dwelling birds.

Fortunately many cavity-nesting bird species will use constructed nest boxes. House wrens, purple martins, bluebirds, chickadees, tufted titmice, tree swallows, screech-owls and even wood ducks will use artificial structures, not only for nesting but also for roosting and for escaping harsh weather.

Before installing nest boxes for birds, consider which birds are in or might be attracted to your WILD School Site. This depends upon the surrounding habitat and the birds that frequent the area. For example, bluebirds forage in open grasslands where they can find plenty of insects to feed their young. Wrens prefer brushy coverts and the woods' edge. Information on birds and their habitat requirements can be found in field guides and various bird books at local libraries and bookstores.

Bird houses can be bought or built in a variety of sizes and shapes. The table included in this project discussion shows the dimensions of bird houses for several species of cavity-nesting Ohio birds.

Houses can be made from materials other than lumber. Natural items, including sections of hollow logs and dried gourds, can be used as well. A few do's and don't's apply to building and erecting bird houses:

1. Don't use aromatic or chemically treated lumber. The fumes can be harmful to young birds.

2. Do drill ventilation and drain holes.

3. Do paint houses with natural colors such as tan or dull green. (The exception is purple martin houses, which should be painted white.) Don't paint the inside of the box.

4. Do locate houses near natural nesting habitat and away from too much human disturbance.

5. Don't put too many houses in a small area. Many birds are territorial and will not nest close to other birds' nests.

6. Do clean houses by removing old nesting material each winter.

Extensions:

1) There are wildlife species other than birds that utilize natural and artificial cavities. You can create homes for squirrels, field mice, raccoons, even bats and butterflies! (Project 18)

2) Five or more boxes, designed and placed specifically for bluebirds, is a bluebird "trail". The progress of the "tenants" should be checked every week or two. A bluebird trail is a rewarding project for both the trail managers and Ohio's bluebirds. Request information from the Division of Wildlife on establishing your trail.

3) Purple martins require a very special house. If your WILD School Site is within a mile or so of a stream, lake or pond, a colonial purple martin house high on a pole is an excellent addition to your bird house project. Purchased aluminum houses on poles that can be raised and lowered for maintenance work best.

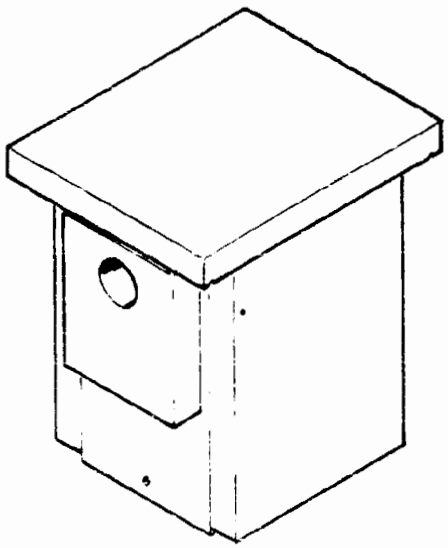

PROJECT NINE

THE HUMMINGBIRD-BUTTERFLY GARDEN

Task:

Use flowers, shrubs and vines in gardens and around the WILD School Site to attract hummingbirds and butterflies.

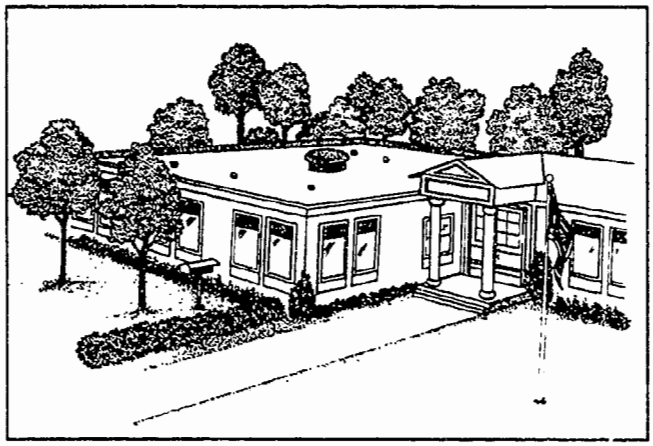

Result:

Hummingbirds and butterflies can provide nearly constant color and activity on the WILD School Site. Butterflies provide a rewarding opportunity to study life cycles and diverse habitat requirements.

Discussion:

People enjoy flowers. It's likely that on many school sites there are places where flowers are already planted in the spring: around the flag pole or a sign with the name of the school, or along the side of a building.

Native flowering plants evolved specific shapes, colors and nectars to attract organisms such as birds, insects, and even bats, that could provide the movement required for pollination.

Humankind, however, has viewed flowers as a tool to improve our quality of life mostly from a visual perspective. We have cultivated and created varieties that please us visually. Unfortunately, many of these blossoms are now so unlike the original "parent" species that their attractiveness to birds and insects is diminished.

A good example is cultivars with double flowers. There are double hollyhocks, petunias, impatiens and more. The double flower, while pretty, limits the flowers' ability to provide nectar or a landing area for desirable wildlife species like butterflies and hummingbirds.

So the challenge of hummingbird-butterfly gardening is to select and arrange flowers based on their potential to provide food and shelter for wildlife. It's as easy as it sounds.

It is impractical to go into a lengthy discussion of planning the hummingbird-butterfly garden here. There are many good books and brochures that provide details; some are listed in the appendices. Some are available free for the asking.

Here, however, in summary, are some ideas to help get you started:

* Only one species of hummingbird lives east of the Mississippi, the ruby-throated hummingbird.

* Some common Ohio butterflies are tiger swallowtails, monarchs, viceroys, painted ladies, hairstreaks, blues, sulfurs and fritillaries.

* If you have selected a flower bed or chosen to create a new one, diagram a garden plan on paper first.

* Be selective in the plants you choose.

Some good choices are listed on the following pages. Remember, some flowers that people favor are useless for attracting hummingbirds and butterflies.

* Be sure your garden location provides adequate sunlight, soil fertility and access to water plants you choose. A soil test might help you determine which plants will do best.

* Garden and seed catalogs are wonderful references. Some of the plants described should be available from local sources.

* A local nursery which is interested and cooperative could be a valuable WILD School Site partner!

* One of your investments will be time. It will take more than one season to get your habitat garden established.

* Perennials provide a lasting foundation for the habitat you are creating. Annuals are an effective complement but must be replaced each year.

* Plant the tallest flowers or shrubs along the back border of your site. Then plant medium-sized down to the shortest flowers in front of these.

* Hummingbirds are best attracted to perennial plants and annual flowers two feet high or higher, nectar-rich with bright red, orange or red-orange tubular-shaped blossoms.

* Don't be limited by your perception of the term "garden". A single butterfly bush in an appropriate corner, a small flower box of petunias, or a clump of wild milkweed are all potentially hummingbird-butterfly gardens!

* Adult butterflies seek plants that provide a place to lay eggs and food for the larva (caterpillar) in addition to nectar.

* Butterfly adults are attracted to red, yellow, orange, pink or purple blossoms that are flat-topped or clustered and have short flower tubes.

* Many wildflowers on or near the school site are butterfly attractors. Boneset, dandelion, goldenrod, milkweed, New England aster, thistle, and yarrow will do well in unmown plots (Project 6).

* Be prepared for other insects. Bees are attracted to many of the same nectar sources as butterflies. Other than the obvious caution, bees can be welcomed in the same way as other wildlife.

Extension:

1) Ruby-throated hummingbirds are easily attracted to special sugar-water feeders. Made of glass or plastic, they can be filled with sugar-water and hung in appropriate locations, and are an inexpensive supplemental food source for hummingbirds.

Use one part sugar to four parts water, boiled for a few minutes to retard fermentation. Honey should not be used. Red food coloring is not necessary, most feeders are red. Feeders should be cleaned and refilled frequently.

Some Flowering Plants Attractive to Butterflies:

Alyssum	Daylily
Anthemis	Golden Alyssum
Arabes	Goldenrod
Asters	Honesty
Aubretia	Hyssop
Blazing Star	Joe-Pye-Weed
Boneset	Lantana
Butterfly Weed	Lavender
Calendula	Lilac
Catchfly	Marigold
Catmint	Mexican Sunflower
Cosmos	Phlox
Daisy	Primrose

Purple Cone-flower
Scabrosa
Sedum
Spectabile
Thistle
Thyme
Verbena
Yarrow
Zinnia

Some Flowering Plants Attractive to Hummingbirds:

Vines: Clematis, Cypress Vine, Honeysuckle, Morning Glory, Scarlet Runner Bean, Trumpet Creeper

Shrubs: Butterfly Bush, Honeysuckle, Rose of Sharon, Spirea, Weigla

Herbaceous Plants: Azalea, Bee-balm (Bergmot), Blazing Star, Canna, Cardinal Flower, Clematis, Columbine, Coral Bells, Dahlia, Flowering Tobacco, Gladiola, Hollyhock, Orange Jewelweed (Touch-Me-Not), Penstemon, Petunia, Phlox, Red Hot Poker, Salvia, Spider Flower,Black-eyed Susan, Common Milkweed

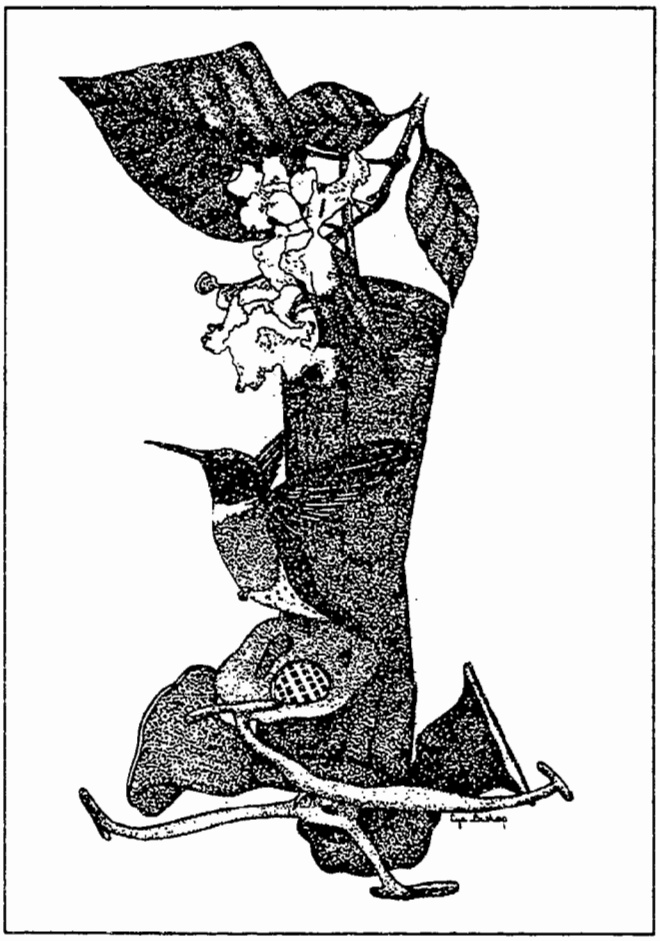

PROJECT TEN

SENSATIONAL SUCCESSION

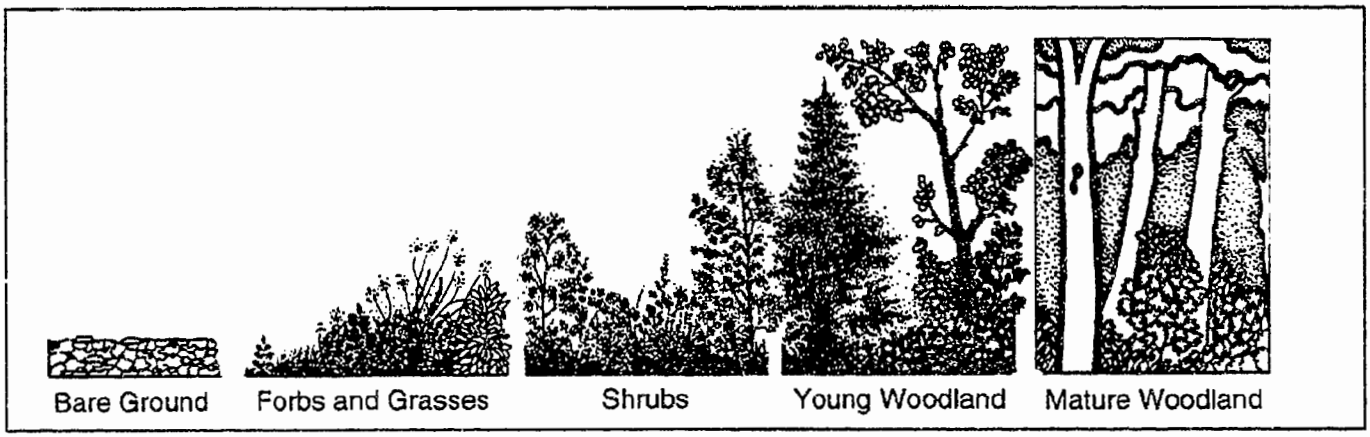

Task:

Set aside one or more plots of land, 100 square feet or larger, that will remain undisturbed and provide opportunity for grasses, forbs, shrubs, and eventually trees to naturally establish themselves.

Result:

Successional plots provide an opportunity to observe and study successional stages and flora and fauna colonization. In addition, many wildlife species require more than one successional stage to meet all their habitat requirements. Interspersion of successional stages within an area can support a greater variety of wildlife.

Discussion:

Plant succession is the change in dominant plant species in an area or on a plot of ground over a period of years. The final "stage" in a predictable sequence of successional stages is referred to as the climax community.

In much of Ohio, the climax community is usually mature woodland with either beech and maple trees or oak and hickory trees as the dominant vegetation.

This sequence of successional stages occurs in a cyclical manner. The type of vegetation that dominates at each stage of the cycle is usually predictable.

In general, the stages of plant succession that occur on land are:

1. bare ground
2. annual forbs and grasses
3. perennial forbs and grasses
4. shrubs
5. young trees
6. mature trees

A single stage may last weeks, months, years, or even centuries. Any of a variety of human and natural factors that disturb the land can affect succession.

In some regions, soil or climate will prevent succession from reaching the next stage. Often factors such as lightning, fire, insects or disease, and tornados, etc. will alter the successional stage progression. Human activity most often is the factor that interrupts plant succession. Farming, timber harvest, clearing brush and, of course, development, interrupt succession.

Different wildlife species thrive at different stages of plant succession. Wildlife managers manipulate plant succession to ensure biological diversity or enhance the habitat requirements of a targeted species.

ON THE SCHOOL SITE

Successional plots can be an extension or continuation of an unmown plot (Project 6). Any unmown plot of ground is actually a successional plot, requiring only time to demonstrate plant succession on land.

Successional stages are best demonstrated, however, in a controlled rotation of identified areas.

Ideally, three to five plots of ground, of similar size and in proximity to one another, can be maintained at various successional stages. One plot, for temporary demonstration, can be tilled to bare ground; others could be allowed to stand fallow for one year, five years, ten years, etc. Of course, the time element and the amount of land available to dedicate to this project will determine the extent of the commitment.

At the minimum, an unmown plot where the woody vegetation is allowed to invade and a second unmown plot that is maintained at a grass and forbs stage would provide an opportunity to study succession and add diversity to the school site's wildlife habitat.

PROJECT ELEVEN

FOOD PLOTS FOR WILDLIFE

Task:

Plant one or more kinds of annual grain (corn, soybeans, sorghum, millet, or sunflower) in a plot established to supplement wildlife food and cover in winter.

Result:

Standing grain crops that remain through the winter provide a supplemental food source for songbirds, pheasants, quail, doves, rabbits, squirrels, and other wildlife.

Discussion:

The three basic components of wildlife habitat are food, water, and shelter. In many areas, there may be ample water and shelter but unreliable food supplies. This is especially true during the winter months.

In agricultural areas, wildlife often utilize waste grain if it is near cover. Modern harvest methods and winter plowing, however, minimize this as a source of food for wildlife.

Some farmers with a strong commitment to wildlife conservation leave a few rows of corn or soybeans unharvested. A few rows of standing corn, in an area of low productivity such as a wood's edge, is highly utilized by wildlife and costs the farmer very little. Food plots of grain crops may be established by farmers and other rural landowners for the pleasure of contributing to wildlife conservation.

In suburban communities and on many school sites, a food plot may only serve as a working model, demonstrating the role that agricultural grain can play in sustaining wildlife in winter.

Establishing a food plot on the school site will require some gardening tools and farming skills. The size and location of the plot will be determined by several factors.

A food plot can be any size but it is most effective when it is 1,000 square feet to 1/4 acre or larger. A smaller "model" food plot, however, can demonstrate this practice.

The closer the food plot is to good cover the more it will be used by wildlife. So in most cases, the food plot should be located near the edge of the school site property that provides the most cover. The cover might be woods, brush or suburban trees. The denser the cover, the better.

The best food plots are usually long strips. Strip width will vary, but the wider the strip the more food and cover that can be created for wildlife.

Sites should be turned over by hand, rototilled or plowed and disked for seeding in spring, between May 1 and mid-June. Applying fertilizer is recommended (10 to 12 pounds of 5-10-10 or 10-20-20 to each 1,000

square feet). Soil testing can help determine pH. If the pH is too low, lime will help produce satisfactory results.

Food plots consisting of grain mixtures can be broadcast by hand and very lightly raked or disked to cover the seed. Don't use herbicides or excessive cultivation. Annual weeds such as foxtail, ragweed, lamb's-quarters and grass will produce additional seed and cover in the wildlife food plot.

Availability and the desired results will determine the grains to include. The following "recipe" can serve as a starting point: for every 1,000 square feet you will need soybeans (4 ounces), dwarf sorghum (8 ounces), proso millet (2 ounces), sunflower (2 ounces), and buckwheat (2 ounces).

Most of these seeds can be obtained from a farm supply store. Should any one not be available, it can be omitted or replaced with a similar quantity of the ones that are available.

Pure stands of corn, soybeans, sorghum, millet or sunflowers produce the most food and can be seeded in one corner of the food plot.

Food plots respond well to a sunny location that is moderately fertile and well drained. Most wildlife species respond best to food plots adjacent to suitable cover.

Extensions:

1) The Division of Wildlife annually makes wildlife food plot seed packets available to landowners. In most years, seed packets for establishing food plots are also available free of charge to WILD School Sites; contact the Division of Wildlife for more information.

2) At rural school sites with grain fields nearby, students could contact the local farmer and suggest leaving a few rows of unharvested corn or other grain adjacent to the school property.

3) If functional food plots are not practical, students could establish a garden of sunflowers. Sunflowers will thrive regardless of the size of the garden. Seed heads could be left standing for wild birds or dried and harvested to be used as feeder filler.

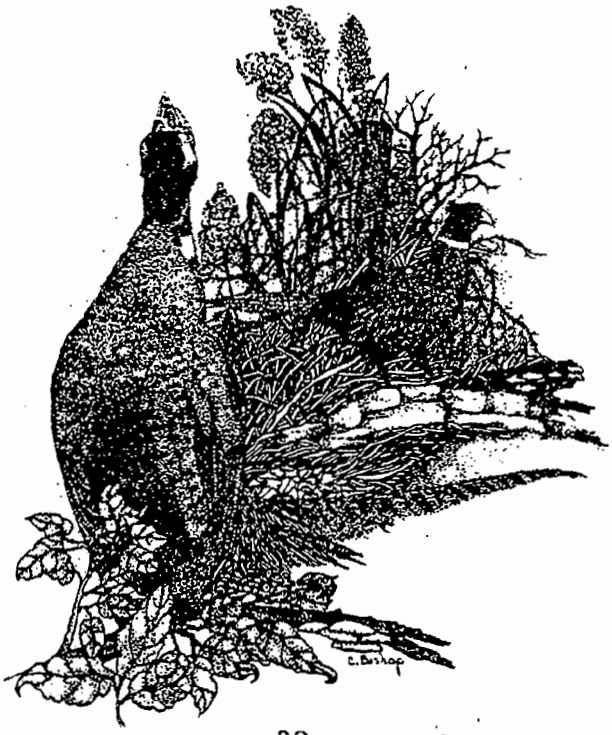

PROJECT TWELVE

WATER

Task:

Water, a critical habitat component, can be provided for wildlife in many ways. From simple bird baths to garden pools, water can be made a WILD School Site feature.

Result:

Many species of birds and other wildlife that are not enticed by food might be drawn to the WILD School Site by water. Fresh, clean reliable water can accomplish much for wildlife and for the WILD School Site.

Discussion:

Most school sites are not fortunate enough to have an existing stream, pond, or wet area. Yet there may be, if not on the property, a valuable educational experience within walking distance. Streams, ponds, and wet areas are ideal places to learn about the relationships of plants and animals to each other and their environment.

On the WILD School Site, with the needs of wildlife as a focus, water development is an integral project.

The simplest and least expensive way to bring water to the WILD School Site is the use of an elevated shallow dish of water commonly called a bird bath. Bird baths come in many shapes, sizes, and materials. Most are shallow, 1 1/2 to 3 inches maximum depth, have a rim for perching birds and a rough surface like pottery or concrete.

Smaller birds like wrens and chickadees are reluctant to enter a deep water basin. A large flat stone or several small ones in the center of the basin will provide even the smallest birds a secure place to drink and bathe.

During the winter months, birds still require water for drinking and bathing. Constant preening and bathing helps them maintain the insulating capability of their feathers.

A water heater, made especially for the task of keeping a bird bath ice free will help provide water in the coldest weather. Make sure the bird bath heater and circuits used to supply electricity are designed for safety. (All materials should be UL listed, with a ground fault circuit interrupt extension cord or receptacle).

Bird baths should be placed where the resulting activity can be observed and enjoyed. Bird baths away from the cover that

could hide predators may make the visitors feel more secure.

Almost any shallow container can be used to provide water. A garbage can lid directly in the ground, a drip tray for potted plants placed on the rail of a deck or patio, a shallow container set on an old stump, or a scooped out log all make great bird baths.

One step beyond the bird bath is the small artificial pond or garden pool. Small permanent pools of water can be created using an old bath tub, a child's wading pool, a salvaged watering trough, or other similar containers.

A hole dug 8 to 10 feet across and one or two feet deep can be lined with concrete or plastic. With a little landscaping, including some rocks and pond plants, these garden pools can look surprisingly natural.

There are ready-made pools, formed out of fiberglass or plastic, available at garden centers and hardware stores. Dig a hole the shape of the adapted or purchased container, place the container in the hole, back-fill with sand or soil as necessary and fill with water, water plants in pots and even fish and tadpoles.

There's a lot of good information on creating garden ponds. Consult the appendices for sources. Make sure that when you plan any garden pond construction you consider maintenance and accessibility. Be sure the site is close to an existing water supply and electricity.

The sound of moving water is extremely attractive to birds. A simple way to provide the "water music" is to suspend a hose , or a bucket with a small hole, full of water from a tree limb five feet or so above the basin of a bird bath and allow the water to drip into the pool. Fountains and waterfalls can be developed in a garden pool with the use of pumps designed for this purpose.

Of course, if your school has the advantage of existing on-site water such as a pond, stream, ditch, marsh, or wetland, a whole new set of challenges and opportunities awaits. There is information available on pond and wetland management; consult the appendices for sources.

The water source, whether a collection of well designed bird baths or a garden pond, provides a real benefit to many kinds of wildlife. It also enhances the WILD School Site community's enjoyment of the area's beauty. Once established, the water source can become a central feature of your WILD School Site.

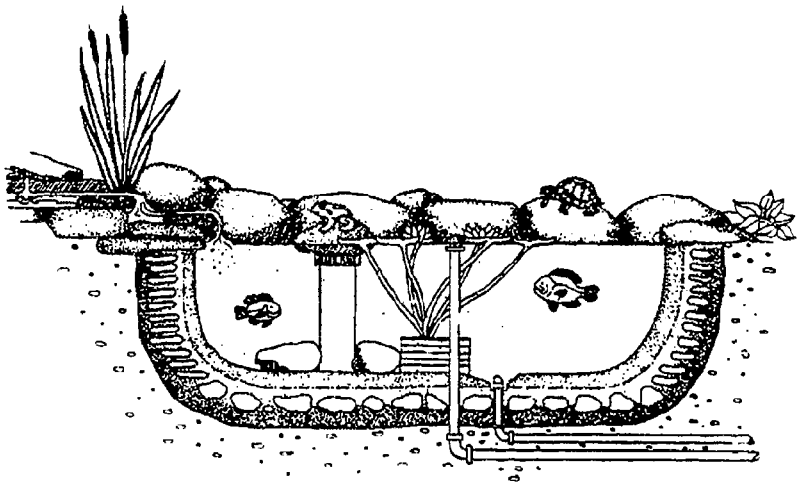

PROJECT THIRTEEN

HEDGEROWS AND CORRIDORS

Task:

Plant or maintain rows of low woody vegetation around field boundaries, along fencerows, in gullies and along stream beds in a manner that connects them with other habitat components of the school site.

Result:

Hedgerows provide wild animals with desirable escape routes, refuge, nesting cover, and travel corridors. Providing for safe movement to and from food, water, and cover will make your WILD School Site more attractive to wildlife.

Discussion:

All wild animals have to get from one place to another during their daily search for food and water. Terrestrial wild animals such as rabbits, foxes, and deer use hedgerows, stream beds, ravines and other corridors for travel lanes. Their survival depends upon undisturbed corridors that have an abundance of vegetative cover like brushy fencerows or hedgerows.

Many times food, water, and shelter occur in separate areas making it necessary to provide accessibility to these "habitat islands" for wild animals from other areas. This can be accomplished by establishing or maintaining existing hedgerows and vegetative corridors on the WILD School Site.

First, choose the location of your hedgerow or corridor keeping in mind the location of other habitat components on your school's property such as feeding stations, water sources, and food plots.

Choose planting locations adjacent to existing fencerows, ditches, streams, boundaries, etc. Planting can be done by hand or with a mechanical planter depending upon the size of the project.

Forsythia, arrowwood, viburnum, hedge cottoneaster, ginnala maple, black chokeberry, and blackberry make for good hedge plantings.

Be sure to space plants properly according to their size. Small plants should be spaced every 18 to 24 inches. Larger plants should be three to four feet apart. For most wildlife, hedgerows at least nine feet wide or wider are desirable. Row lengths will vary, depending on the need and available space.

To improve a hedgerow or corridor, plant a few scattered vines and trees along the row. Research shows an increase in wildlife activity (especially birds) along hedgerows where trees are scattered through the row.

Fencerows that are already present on the WILD School Site can be converted into wildlife corridors by planting a few scattered trees, shrubs, and vines along the fence.

Constructing rock piles (Project 20), brush piles (Project 1), and placement of nest boxes for bluebirds, kestrels, and other wild animals (Project 8) will enhance your hedgerow. Hedgerows can also be established by using the perch and plant technique (Project 2).

Extensions:

1) Naturally occurring plants grow in many layers rather than all at the same height. Many species of wildlife feed, nest or rest only at certain heights in these layers. Plant three to four rows of plants of varying heights in parallel hedgerows creating a stairstep pattern of multiple layers. Study which animals are most active in each layer.

2) Greater diversity and numbers of wildlife can be found where two or more habitat types meet. For example, where a woodlot meets a grassy meadow or stream, a zone of change occurs between two habitat types resulting in greater diversity in vegetation and greater diversity in wildlife using the area. This zone of change is called an edge. On your WILD School Site, simulate natural edges by establishing hedgerows near another habitat type. This time, however, plant the hedgerow in curves or irregular borders (no straight lines; you want a more natural look). "Pockets" in the curves will provide more secluded hiding places for wildlife. Compare this "edge effect" hedgerow to the other hedgerows and note any differences in wildlife usage.

PROJECT FOURTEEN

A HAVEN FOR HERPS

Task:

Provide for the habitat needs of reptiles and amphibians by constructing or modifying features that supplement food and shelter.

Result:

Many species of reptiles and amphibians are common to Ohio, even in urban and suburban settings. By establishing appropriate shelters, some of these common but often overlooked wildlife species can be attracted to the school site where they can be observed and studied.

Discussion:

The idea of attracting snakes to the school site may at first seem utter folly. Most of us have been taught to believe that snakes, like rats and mice, should be excluded or even exterminated when discovered.

Snakes and other herps—frogs, turtles, toads, and lizards, however, are fascinating and ecologically important. And it takes very little to include "herp" habitat at the WILD School Site.

Snakes are reptiles. Lizards, turtles, and crocodilians are also reptiles. Amphibians include frogs, toads, and salamanders. "Herps" are reptiles and amphibians collectively. The word "herp" comes from "herpetology," a branch of zoology that focuses on reptiles and amphibians (Herpeton is Greek for "crawling things").

Amphibians and reptiles were lumped together because early biologists thought they were closely related. Actually, while today's reptiles and amphibians have common ancestors, they are two very different classes of animals. Yet the practice of studying them together persists.

Even though reptiles and amphibians are very different animals, they have some important characteristics in common that allow us to consider them collectively for inclusion in WILD School Site projects.

There are many good texts on reptiles and amphibians (see appendices) and a more comprehensive study of these common and interesting animals would be an appropriate extension of these WILD School Site projects.

The Ohio Division of Wildlife offers two excellent booklets, *Ohio's Reptiles* and *Ohio's Amphibians*. Be sure to include a review of these references as you pursue these projects.

HERP HABITAT

In all likelihood, snakes and other reptiles and amphibians are already at least occasional visitors to most school sites. What can be accomplished by providing for their habitat needs is the opportunity to concentrate them into predictable locations.

The habitat component easiest to manipulate for herps is shelter. Shelter for any wildlife species, however, is directly related to various specific survival needs, particularly for herps.

Herps are "cold blooded" (their blood isn't cold). This is an inaccurate phrase used to label animals that don't generate enough body heat to maintain a constant temperature. The more accurate term is *ectothermic*, as opposed to *endothermic* which is used to refer to warm-blooded animals like birds and mammals.

Shelter that helps herps stay cool when it's hot or warm when it's cool is the most effective way to satisfy this important habitat function.

Other functions of shelter include a place to nest, bear young or lay eggs, and a place to hide or escape from predators.

Shelter for reproduction is very different for reptiles and most amphibians. Amphibian eggs must remain moist to hatch and many amphibians deposit eggs directly into water. Amphibian eggs do not have a shell, but rather a moist, jelly-like covering. Amphibians lay eggs singly, in masses, or in strings in the water or some other damp place.

Most reptiles, on the other hand, lay shelled eggs in a variety of dry, protected locations.

Water projects and activities can easily be adapted to provide for the needs of aquatic reptiles and amphibians (Project 12, Activity 9). A garden pool intended to provide water to attract a variety of wildlife often becomes a "frog pond" on its own. A log or rotting tree trunk at the edge of a pond soon becomes a favorite resting spot for frogs and turtles (Project 5).

To further enhance reptile and amphibian habitat on the school site, the challenge is to duplicate their natural choice for homes as closely as possible.

As we study where certain herps might be found in a natural setting, we can get ideas on how to create or mimic that habitat. For example, one source tells us the red-bellied snake is often found "...hidden beneath boards, rotting logs, brush piles and leaves where it seeks out slugs, earthworms and beetle larvae."

Some species, of course, like many frogs and turtles are totally aquatic and unless your school site has a permanent pond or stream, the chances of counting them among the visitors to your site are slim.

Many aquatic species, however, will visit even the simplest garden pool or rain water retention project. Some amphibians require only "moist" sites in which to spend all or part of their life cycle. And a few require only seasonal puddles in which to lay their eggs.

Many snakes and lizards, on the other hand, prefer dry areas over wet ones for much of their existence. A sure way to provide shelter for snakes is to concentrate on what makes them comfortable.

In cool spring weather, snakes may seek warm, dry places to rest and hide. During the summer heat, they will seek cool, damp shelter.

This activity lists only those few common herps that might be induced to use the school site as home during at least part of the year. It suggests simple habitat projects to provide for the shelter needs of these species.

A TOAD HOUSE

Nature specialty stores carry clay toad shelters. These are attractive and interesting features when placed in proper habitat. Larger clay flower pots with an entrance tunnel cut into the rim of the pot and placed upside down in moist, shaded areas may temporarily attract toads, particularly as they move about in the spring.

SNAKES AND SNAKE SHELTERS

Snakes are fascinating and gentle creatures. Yet, it's likely no amount of reinforcement can quickly or easily help someone with an unreasonable fear of snakes to overcome their phobia.

If we, however, provide youngsters an opportunity to observe and study snakes in as natural a setting as possible, snakes on the school site can be welcomed with the same enthusiasm as birds and small mammals. It's a simple and enlightening discovery for many that the common snakes likely to visit the school site are no more threatening or dangerous than a chipmunk.

Ohio does have three poisonous snakes. While the likelihood of one of the rattlesnakes or the copperhead visiting the school site is slim, the chance of someone being bitten is even slimmer (considerably more people are struck by lightening). It's best to handle or closely approach only the snakes that have been positively identified and are known to be harmless.

The Division of Wildlife booklet *Ohio's Reptiles* is an excellent reference for identifying snakes.

Some of the projects you may have already considered or initiated may provide some potential as a snake shelter. With some modification, a study log (Project 5), a brush pile (Project1) or a rock pile (Project 20) can be considered herp havens.

A very effective snake shelter can be built using fiberglass or metal corrugated roofing material. A piece of roofing, in any easy to handle size (from two feet by four feet up to four feet) by eight feet is framed on two inch by two inch lumber. A door or cabinet pull handle is added to aid in lifting the shelter. Holes are drilled or punched into one-half the shelter to let in rain for moisture or to help the ground beneath dry out if it's too wet.

Rubber or vinyl backed indoor-outdoor carpet or a larger rubber-like doormat work well too. However, these carpet shelters tend to dry out underneath during the summer months.

Crafted shelter can be made from items as simple as an old piece of plywood, carpet, linoleum or other similar building scraps. The simplest application is to place a manageable size piece of these recycled materials flat on the ground in any appropriate location. Shelter constructed with these scraps can easily be repositioned with the season and/or placed at inconspicuous locations.

These types of shelters are particularly effective in the spring when snakes first emerge from hibernation. When placed in a weedy field or unmown lawn area in full sun, these shelters provide a warm, moist place to hide as the sun first warms up the ground after a cool spring evening.

Later in the summer, this type of temporary shelter is most effective in shaded, moist areas such as a stream side or wooded area.

Weather and time of year will determine the most effective location. It's a simple matter of comfortable temperature and moisture. Excessive heat, cold or lack of moisture will repel most snakes.

Your snake shelter should be accessible and easy to lift. This is where the fun begins.

Slowly lift the shelter to briefly expose all that is hiding there. Frequently if conditions and nearby cover are appropriate, you'll be greeted by a shy and harmless garter snake.

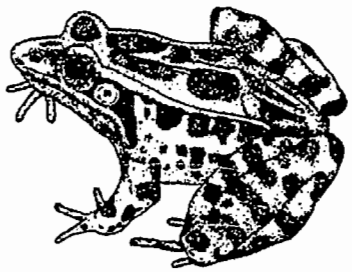

REPTILE AND AMPHIBIAN HABITAT

SPECIES	NATURAL HABITAT	WILD SCHOOL SITE FEATURE
Lizards		
Northern fence lizard	Dry, wooded hillsides in unglaciated Ohio	Loosely stacked pile of weathered plank lumber; brush piles at the edge of dry, open woods
Five-lined skink	Under bark of decaying logs, stumps, or rock piles; found throughout Ohio	Rotting log features (Project 5) designed as herp habitat; pile sawdust near stumps or logs. Place flat rocks near above features for "sunning" or as part of rock garden border.
Snakes		
Midland brown snake	Under stones or logs and other debris, often in urban locales, vacant lots, parks, etc. In natural settings, hillsides, swamps, and woods	Piles of flat stones, logs, old boards, or an artificial snake shelter
Eastern garter snake	Moist habitats: wet woods, meadows, drainage ditches and streams	Old logs near water, naturally wet meadows, or moist snake shelters
Milk snake	Variety of habitats: woods, meadows, river bottoms, old buildings	Old boards and sawdust Dry snake shelter
Salamanders		
Dusky salamander	Under rocks in shallow woodland brooks	Arrange flat stones as shelters along streams or ditches
Redback salamander	Beneath rocks and logs in floodplains	Rock piles and rotting logs in moist areas
Northern two lined salamander	Under rocks in shallow woodland brooks	Arrange flat stones as shelters along streams or ditches
Spotted salamander	Low, moist woodlands, underground tunnels	Will visit ponds and pools for breeding in spring

SPECIES	NATURAL HABITAT	WILD SCHOOL SITE FEATURE
Toads and Frogs		
American Toads	Urban backyards to remote woodlands	Will visit pools and ponds for breeding, clay toad pots provide shelter
Spring peeper	Moist woodland shrubs	Shallow pools and ponds will attract peepers in early spring.
Gray treefrog	Arboreal; streamside trees and shrubs	Will use planted trees in moist sites
Bullfrog	Ponds, marshes	Permanent water features
Leopard frog	Lakes, ponds, rivers, wet meadows	Wet grassy areas in summertime
Turtles		
Aquatic turtles (snapping, spotted, musk, painted, spiny, softshell)	Permanent ponds, streams, etc.	Will use logs at the edge of ponds and streams
Box turtle	Woodland, rotting logs, decaying leaves	Woodland features, odd areas

PROJECT FIFTEEN

PERCHING POST

Task:

Secure and erect isolated prominences for birds using old wooden fence posts or purchased four inch by four inch timbers.

Result:

Birds that are inclined to use prominences, for a variety of functions, may stop momentarily at a fence post erected just for that purpose. The isolated prominence in an area of more open space becomes an "island" of habitat.

Discussion:

We often see birds perched on power lines and poles or fence posts and likely give it little thought. Yet, there is value in these perches and method in the birds' behavior.

In some open country habitats, a prominence such as a single isolated tree, utility pole or even a fence post is utilized by a variety of birds.

Birds of prey, such as the American kestrel, use the prominence as a vantage point to search for small mammals, snakes or insects. The bluebird, in its own way a bird of prey, is more attracted to habitat that provides it with perches. This bird uses open trees, wires or fence posts to perch and search the short grass for insects.

Other birds, like the mockingbird, will seek out a prominence to perch and sing its territorial song.

Still others explore any post or pole for the possibility of nesting sites or as the source of an insect buffet. Red-headed woodpeckers and flickers will often make short visits to such a feature.

At one site in a suburban Ohio backyard, 17 different species have been observed using a single locust post. The list includes those previously mentioned plus crows, goldfinches, robins, chickadees, grackles, dark-eyed juncos, house finches, house sparrows, doves, cardinals, tufted titmouse, bluebirds, and a Cooper's hawk!

As Ohio farmers replace old wooden fence posts with more durable steel (a practice which has reduced nesting opportunities for bluebirds and other cavity nesters) we can recycle those posts into a variety of WILD School Site features. They can be used as the foundation of a brush pile (Project 1), a pole on which to erect a bird feeder (Project 4), and they are ideal when erected in open habitat as a post just for perching birds. They are attractive in a weathered, useful sort of way and may even offer insects and cavities, providing for more needs than just perching.

If old fence posts cannot be located, landscape timbers or treated deck lumber (four by four posts) will work fine. A new post

may be eight feet long. If placed and set into a two-foot deep hole, a six-foot high perch will be provided.

On some school sites, this might be all that can be accomplished, but on others a variety of post heights and locations would maximize the impact and observation opportunities.

Pick an open area, but as with other features, the proximity of dense cover and water will influence the posts' effectiveness in attracting birds.

Extension:

1) The posts that serve as anchors for a perching wire (Project 2) might also double as perching posts!

PROJECT SIXTEEN

THE PRAIRIE GARDEN

Task:

Establish a garden plot of native prairie flowers and grasses.

Result:

Prairie forbs (wild flowers) and grasses are easy to grow and provide waist-highblooms of white, yellow, crimson and lavender.Prairie gardens provide a glimpse of Ohio's past and are a habitat type important to many grassland nesting species of wildlife. You may find your prairie garden as attractive to butterflies as any butterfly-hummingbird garden (Project 9).

Discussion:

Small patches of prairies grow throughout much of Ohio. They are relics of a time 4-6,000 years ago when a sustained warm, dry period allowed the expansion of drought-resistant western plants eastward through Ohio and western Pennsylvania.

When the rain and cooler summers eventually returned, the eastern edge of the prairie again gave way to forest except for pockets of land where erosion, shallow dry soils or prolonged seasonal flooding prevented tree seedlings from developing. Today, because of agricultural expansion, only a few scattered prairie remnants survive.

Choosing the Site

The first step in creating a prairie landscape is to choose the site. Except for needing full sunlight, prairie plants adapt to most conditions.

Prairie plants grow in a diversity of soils, from clay to sand, and tolerate a wide range of soil fertility and acidity. Prairie plants also grow in dry, shallow soils or marshy soils that most plants cannot tolerate.

Prairies are divided into three types: dry, mesic or moderately moist, and wet. Mesic and dry prairie plants prefer loose soils with good drainage while wet species grow in poorly drained areas where water stands after a heavy rain.

Planning

Once the site is selected, you may want to draw a planting plan. The following tips can help you design an attractive and healthy garden:

* Use native Ohio species whenever possible.

* Match plants to your soil — dry, mesic or wet.

* Fit the size of the plants to the size of your area. Keep tall plants to the edges.

* Planting in curves instead of rows will give you a more natural look.

* Allow one species to dominate, then blend in another.

* Try for continuous color throughout the growing season.

* In a large prairie garden, you may want to make paths to walk along.

* You can turn your prairie garden into a wildlife oasis by selecting plants that are attractive to butterflies, birds and other wildlife.

Nurseries that sell prairie seeds or books about prairie flowers can help you select the species best suited to your needs.

Selecting Seeds and Plants

Seeds for a prairie garden can be collected or purchased. The many prairie remnants that grow along highways, railroads, fencerows, and in abandoned cemeteries throughout Ohio are a good source of seeds.

Some prairie plants, however, are endangered or rare and protected by law on public land. Seeds cannot be collected there. Always get permission from landowners to collect seeds on private property.

Digging mature plants is difficult because of the deep roots and is not a good way to start a garden.

Collecting, drying, storing, and properly preparing collected seeds for later planting is an enjoyable and rewarding activity (Activity 10).

Young plants and seeds can also be purchased. There are many nurseries that specialize in native prairie plants.

Maintaining the Garden

The biggest challenge in developing your prairie garden is controlling weeds during the first two or three years. Prairie plants spend the first years of their life rooting while weed species put all their energy above the ground, crowding out prairie seedlings.

Weed control can be accomplished through a variety of means such as herbicides, mulching or hand weeding. Planting a groundcover crop like oats or annual rye the first summer will take up space so weeds cannot crowd out prairie plants. Since they only live one year, they will allow prairie plants room to expand the second year.

Mowing and raking every spring also help control weeds and promote growth. You should mow in late June with the blade set about five to eight inches high. This will cut back early growing annual weeds but not affect slower-growing prairie plants.

By the third year, there is little for the prairie gardener to do but enjoy his or her colorful landscape! The plants require no covering, no pruning, no spraying, little if any fertilizing, and no irrigating.

Some prairie plants:

Grasses:

Big Bluestem Indiangrass

Little Bluestem Prairie Cordgrass

Forbs:

Prairie Dock, Culver's Root

Compass Plant , Bergamot,

Whorled Rosenweed, Mountain Mint,

Rattlesnake Master, Stiff Goldenrod,

Black-eyed Susan, Tall Coreopsis,

Purple Coneflower, Butterfly Weed,

Blazing Star.

Extensions:

1) A field trip to a remnant native prairie is educational and enjoyable. Because of extensive agricultural development, only small patches remain in Ohio. Many of these sites occur in cemeteries, along railroads and highways and on steep banks where soils have remained relatively undisturbed. Others are protected within state forests, wildlife areas and nature preserves.

2) Research the extent of prairie openings in pre-settlement Ohio. What physiographic features are associated with prairie habitat? What species of wildlife were prairie dependent in early Ohio?

This project was adapted from the Division of Natural Areas and Preserves' brochure "Making a Prairie Garden".

PROJECT SEVENTEEN

GRIT, SALT, DUST, AND MUD

Task:

Food, water and shelter for wildlife are supplemented with less obvious components: grit, salt, dust, and mud.

Result:

Some wildlife species may be attracted to and utilize habitat components such as dusting beds, grit, salt blocks or licks, and mud when established as part of a habitat management plan on a WILD School Site.

Discussion:

It's relatively easy to focus on wildlife's food, water and shelter needs. Yet, beyond the obvious, these habitat components can be enhanced by providing certain other elements required in some species' "complete" habitat.

Grit, for example, may seem readily available in exposed gravel areas along roadsides or playgrounds. But is it in a form or place that's actually attractive to wildlife? Grit is required by many birds for grinding up food in their gizzards. Grit is fine sand, coarse sand or even small gravel.

Most birds will not limit their range to the WILD School Site and can likely find grit in nearby fields and woodlands. But if we're trying to attract birds to our site by providing for their needs, then a strategically placed tray or bed of sand or grit may increase the number and variety of birds that visit.

Grit can be placed near the feeding station (Project 4) or food plot (Project 11) to enhance their attractiveness.

Commercially available grit for domestic poultry can be purchased at feed and farm supply stores. In this form, the actual function of grit is validated and the grit supply can conveniently be replenished by the WILD School Site stewards.

Other grit-like substances may be helpful in providing minerals that some birds seem to crave. Eggshells are used to help attract purple martins and can be included at the WILD School Site martin colony (Project 8). Some martin landlords claim eggshells have helped attract martins to a new colony nest box. Eggshells, saved by WILD School Site stewards, dried and crushed, can be offered in the same way grit is provided.

Other grit that has mineral value includes fireplace ash and ground seashells. Feed store grit is often fortified with minerals and is fine for wild birds.

Salt is a mineral essential to a complete wildlife habitat. For many species, the salt requirement is met as a trace element in their food, but other wildlife will actively seek out and use salt deposits.

Coarse salt is sometimes provided at feeding stations. Grosbeaks and crossbills will use feeding station salt.

A "salt lick" is often suggested in literature as being attractive to wildlife. The salt blocks sold for cattle at feed stores can be used to create a salt lick on the WILD School Site.

A salt block in good deer habitat, at the edge of a meadow or good cover, will be used by deer and a variety of other wildlife species as well. If your school site is situated so that cover and a salt block can be observed from the school building, this is a great way to bring deer in for viewing enjoyment.

Dust, like grit, is used by many wild birds to satisfy special needs. Pheasants, quail, turkeys, and songbirds will squat in beds of dry soil, fluff up their feathers and take a dust bath. Dusting helps birds control parasites.

Dusting sites are plentiful in rural Ohio. But you can make your WILD School Site more complete and attractive to wild birds by creating dust beds. A school site dusting bed can be simply a small circle, no more than 1 1/2 to 2 feet across, of dry, finely pulverized soil. Dusting sites you create should be located near cover or food sources to maximize utilization.

Mud is used by many birds for nest building. Providing a source of mud can encourage birds to nest nearby (Activity 1).

Extension:

1) Dust and mud, like the animal tracking plot (Project 3), will show evidence of use even if the activity is unobserved. Tracks, wing prints and feathers left behind will confirm the usefulness of your creation.

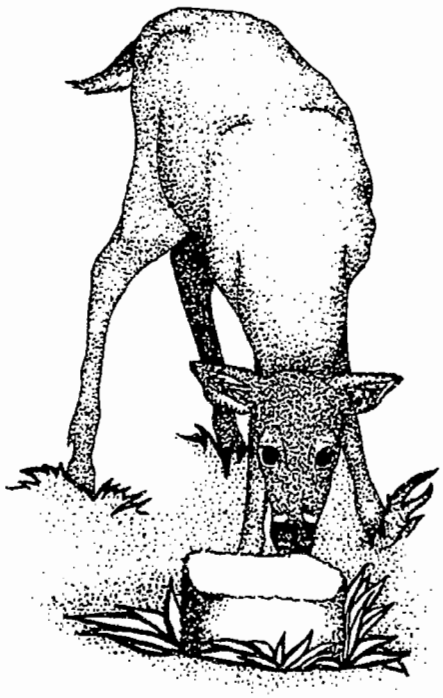

PROJECT EIGHTEEN

SQUIRRELS, BATS, AND BUTTERFLIES

Task:

Construct and/or purchase and erect nesting and shelter structures for wild animals in addition to traditional "birdhouses."

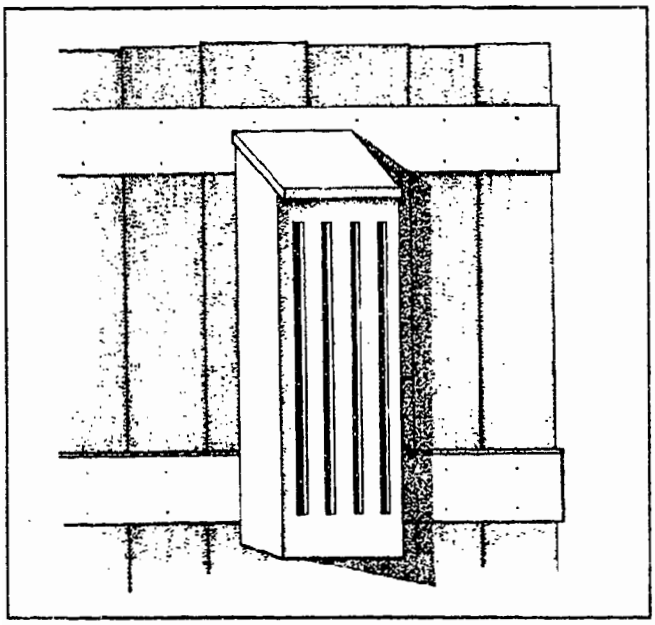

Result:

You can provide shelter for many wild animals in addition to birds by constructing wooden "houses". Among the animals that will use such structures are bats, butterflies, squirrels, raccoons, and even mice!

Selective additions of nesting and roosting boxes on the WILD School Site can supplement existing habitat and bring wildlife into predictable locations to observe and enjoy.

Discussion:

As with cavity-nesting birds, not any old birdhouse will do. Each bird or mammal species needs a different kind of house or platform in different habitats. For some species in addition to a place to nest, artificial structures can provide shelter from harsh weather.

There are several good sources of plans for nest boxes, roosting boxes and other artificial structures of all kinds. Some are listed here in the appendices. Woodworking classes within the school system are often looking for projects to show off their talents and benefit the school community. Nesting and roosting structures for wildlife are ideal projects.

Squirrels

Gray and fox squirrels readily adapt to nest boxes in backyards, woodlots, farm groves, parks, and on WILD School Sites.

While in the wild, gray squirrels prefer the unglaciated hills and the thicker understory of the forests of southeastern Ohio. They are also the species we see most often in parks and in urban areas where there are mature trees.

Fox squirrels are found more commonly on farmsteads, river bottoms and woodlots in both the glaciated and unglaciated part of Ohio.

Squirrel nest boxes are often used by wildlife managers to supplement nesting sites in immature forests. Squirrel boxes are like large birdhouses intended to mimic a good sized tree cavity with an appropriate entrance hole.

Squirrel boxes should be placed in trees at least 10 inches in diameter. They should

be at least 15 feet above the ground with the entrance hole facing east or south to keep out prevailing winter winds. Squirrels like their nest boxes half full of dry leaves.

Bats

Bats, like snakes are among the least understood and most misrepresented animals. Bats are important members of an ecosystem and deserve attention from both conservationists and educators.

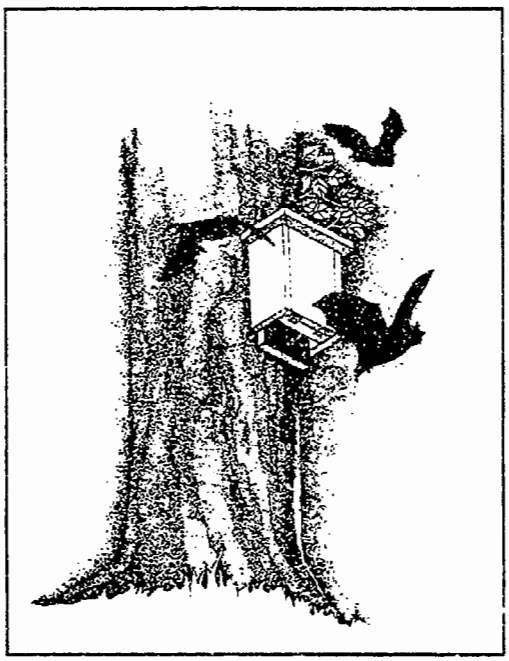

Bats are nocturnal and seek dark, warm roosts during the daylight hours. Artificial bat houses are highly specialized structures, usually designed as a hollow box with a crack in the bottom for entry and several narrow compartments for roosting bats.

Bats are picky about where they live. A bat house must be of the proper design, get the right amount of sun and face the proper direction. Interestingly, research has been lacking on just what these parameters might be.

A watchful eye on the evening sky can reveal just how common bats are near your WILD School Site. With some additional research, a well designed and placed bat house or two, and a little luck, you might just be able to induce common and harmless Ohio bats to roost and make the school site home.

Small Mammals

Many bird nest box managers have discovered native mice—deer mice or white footed mice in a nest box intended for wrens, chickadees or bluebirds. While this situation or the occasional mouse in the house may be considered a nuisance, these native mice are appealing and interesting mammals.

Houses for mice (a wren house design works fine) are placed closer to the ground than birdhouses, usually only two to three feet off the ground. Boxes mounted on fence posts along fence lines with some wooded or brushy cover nearby are likely to attract mice.

As the mice raise families in a leaf and fur nest, they provide a source of fascination for students who may occasionally open the box and study these bug-eyed occupants.

Butterflies

Some butterflies migrate, others live for a single season, but some spend the winter months here in Ohio. They find shelter under the loose bark of trees, in old barns or other out-buildings and in hibernation boxes.

Hibernation boxes, as the name implies, provide an artificial enclosure which encourages butterflies to remain near your WILD School Site gardens through the cold months.

Hibernation boxes for butterflies are narrow wooden boxes with small vertical slots in the front. The inner surface, as with many nesting and roosting boxes, needs to be rough or grooved to provide a griping surface.

Hibernation boxes mounted about five feet above the ground near host plants may help keep newly active spring butterflies in your school site garden.

Other Visitors

Many other birds and wild animals, some desirable and other accidental, will use artificial structures for nesting and roosting. These structures sometimes become a part of a functional ecosystem in that they attract predators who explore the structures as a source of food.

It is desirable to focus on attracting birds or other animals with boxes designed and placed specifically for them, and to include predator guards as part of the design.

Ants, wasps, feral cats, raccoons and house sparrows don't belong in houses intended for bluebirds.

On the other hand, the more habitat for wildlife your school site provides the more likely it is that the site will host life processes of all kinds: food gathering, reproduction, competition for shelter, and the life and death struggles that are a part of natural world.

PROJECT NINETEEN

OBSERVATION BLINDS

Task:

Construct blinds (hiding places) and seating that allow individuals or groups to observe from concealed areas without disturbing wildlife.

Result:

Catching a glimpse of a cottontail rabbit, a squirrel or deer is fun. But that glimpse is usually after the animal has seen you and is departing. There's a very special thrill in being able to observe wildlife, up close, without being detected. Observation blinds can help provide that opportunity.

Discussion:

Hunters and photographers have long used blinds for concealment as they wait for wildlife to approach. Often these blinds are temporary and hastily constructed out of materials at hand. For the WILD School Site, however, functional observation blinds will require some thought and planning.

Blinds can be constructed from a variety of materials. Treated lumber, fencing, natural materials, tent or canvas material all can be fashioned into hiding places with "see through" observation openings.

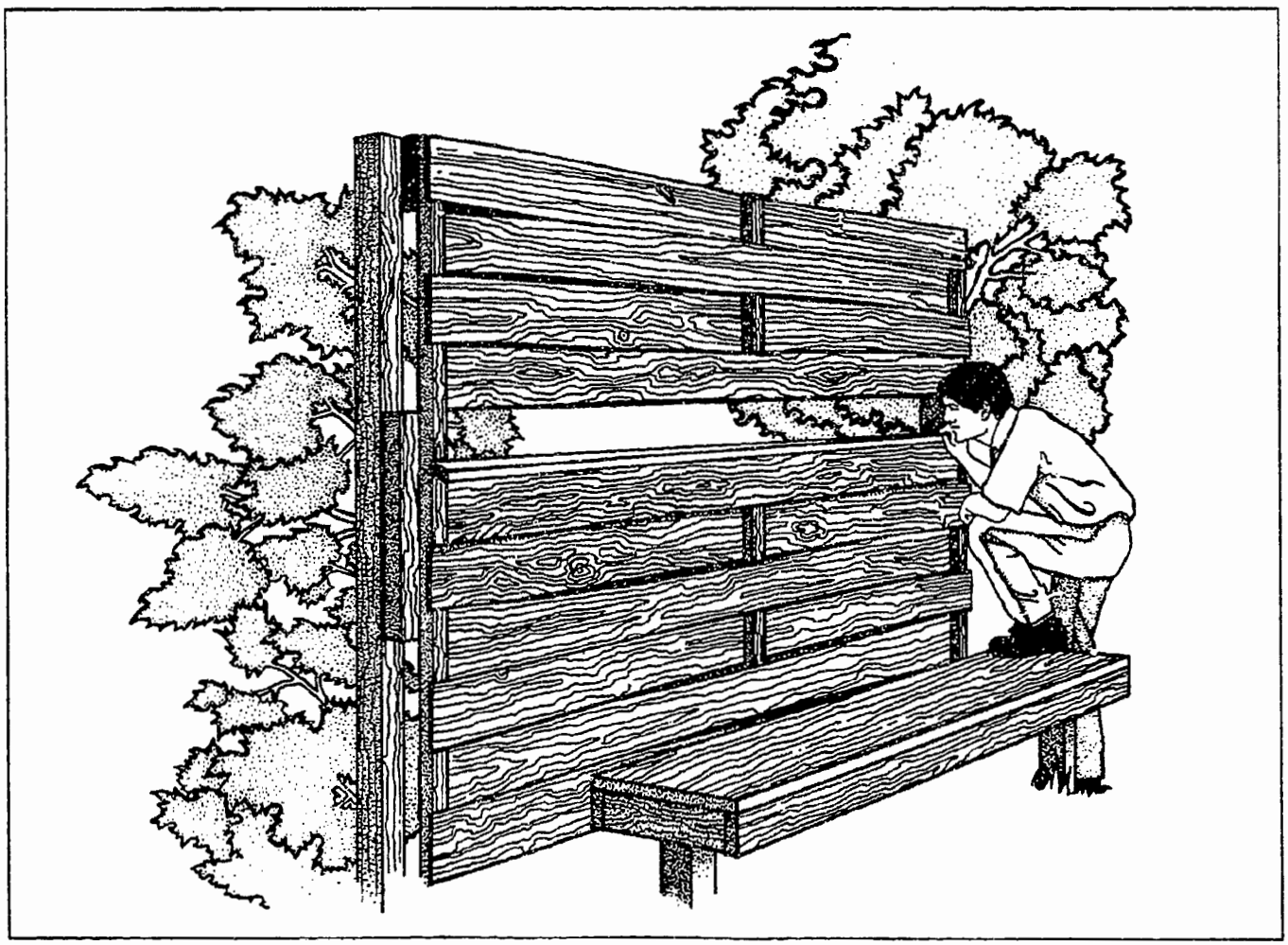

Preconstructed 8 to 10 foot sections of privacy fence are handy and can easily be modified to provide a long-lasting, attractive blind. Any blind, whether it is made of wood, wire or other material, can be made more natural in appearance by weaving or strapping dried grasses, cattails or tree branches to the structure.

While a natural-appearing blind may blend into the surroundings of a particular location, wildlife will become accustomed to any structure, virtually ignoring it, if there is food and cover nearby.

Unnatural movements and sounds disturb wildlife more than unnatural shapes. So persons using the blind need to sit quietly even though they are concealed.

The approach path to an observation blind should be designed so that people are screened from sight when they enter the blind. The screened path could be created with a dense hedge planted just for that purpose or through already existing dense cover.

The more comfortable the blind, the longer observers can remain quiet and still. Seating should be designed and constructed along with the blind.

Permanent benches, pole seats from tree trunks or portable seats strategically placed will make the blind more inviting for frequent use.

The goal is to construct the blind in a place that will provide the opportunity to observe wildlife; it is typical to start with birds. Remember wildlife species are seeking food, water and shelter. Blinds located with a view of a food plot, water source or feeding station, with cover nearby, will provide the greatest opportunities to see wildlife.

Extensions:

1) Wildlife photography is a rewarding hobby and helpful in sustaining WILD School Site projects and activities. The observation blind should be designed to accommodate persons with cameras, binoculars and spotting scopes.

2) Camouflage clothing, used by hunters, military personnel and sometimes found at the local department store's fashion section is a tremendous asset for wildlife observation. With patience and complete camouflage, wildlife observers can sit among birds and other wildlife and be as close to invisible as if they were concealed in a blind.

Mammals that approach the concealed observer will often use their sense of smell to warn them of danger. No amount of concealment will hide you when a breeze carries your scent to an apprehensive deer or fox.

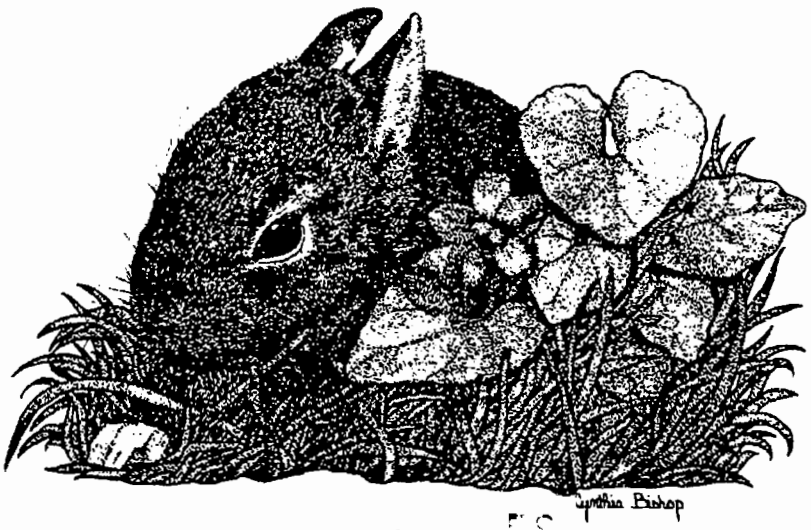

PROJECT TWENTY

ROCKS AND BOULDERS

Task:

Secure rocks and boulders from various sources to create rock piles for wildlife habitat. Boulders and rocks contribute to the study of geology and add interest to the site. Smaller rocks to be turned over, to examine what's hidden underneath, can be included here and with other projects.

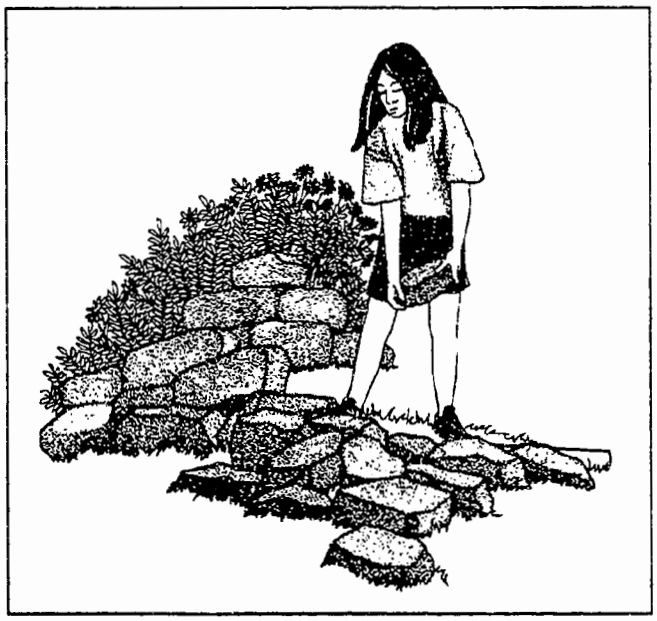

Results:

Rock piles are valuable cover for many wildlife species. Amphibians, reptiles, chipmunks, and rabbits use this type of habitat for shelter and as a place to rear their young.

Towhees, wrens, sparrows and other ground-feeding birds are attracted to sharp angles and changes of slope. A steep rock face mimics their preferred feeding area in the wild.

Rocks are one of the raw materials of soil. Colonization by lichens and other plants provides witness to the first stages of soil building.

Rocks and boulders can add to the study of geology- fossil and ore-bearing rocks, glacial erratics, and even building materials such as limestone, sandstone and marble are included.

Discussion:

It's unlikely that many school sites are fortunate enough to have a rock wall in some corner or along a property line. Yet a few generations ago, as farmers cleared the land for agriculture, they moved large rocks to the field border. This served to ease the burden of plowing, to mark property lines and sometimes to create a garden wall or fence to highlight the homestead yard.

There are many places in Ohio today where Robert Frost's *Mending Wall* is still a landscape feature. And they are fascinating, Fascinating enough to consider using rocks and boulders on the school site to demonstrate some of the fun things that happen within and on piles of rocks.

A readily observed value of a rock pile is the home it creates for a variety of wildlife. Much like a brush pile (Project 1), piled rocks of various sizes can provide protection from the elements and predators. Passageways and entrance tunnels should be supplemented with scrap pipe, tile or culvert.

Just how you go about creating a pile of rocks and how to answer the obvious considerations of rocks and pile size is problematic.

In many parts of the state, gravel mines and stone quarries would be a good choice for professional assistance. Several tons of mined or excavated boulders, one small truckload deposited strategically, and you have a rock pile.

The same quarry could provide, and perhaps even donate, large boulders representing different kinds of building material or geologic formations.

A small rock pile, created with individually placed rocks, much the same as if you were building a rock wall, may be all that is practical on some school sites. How large should the rocks be? Too large to pick up and throw, yet small enough to be handled.

Often boulders are left behind during excavation and construction of new school buildings. These boulders should be left where they are and incorporated as a WILD School Site feature.

The location of a rock pile or individual rocks and boulders should benefit wildlife and the students, but not be a problem for maintenance personnel.

The rock pile would be most effective if located in association with a water source on the school site or a feature that provides cover or one that is not mown regularly.

Large rocks near a prairie garden (Project 16) or hummingbird- butterfly garden (Project 9) add the rock garden dimension to these projects. Butterflies enjoy sunning themselves on large heat-holding rocks.

Extension:

1) Students can add to the rock wall, pile or boulder field by bringing rocks from home or samples from a vacation site.

PART TWO

TWENTY ACTIVITIES

The opportunities are unlimited. But to get you started, here are twenty activity possibilities.

No printed activity should be followed "to the letter." Consider this a list of ideas to be adapted to any grade level, setting, and available resources. In most cases, no site enhancement is necessary. Every school site has potential.

There are things missing here, things you'll probably need to supply, a little additional planning and a tool or two; but it's all worthwhile. It takes just a little adjustment but once you venture out and discover the power of teaching in the out-of-doors on the school site, you'll watch as your traditional classroom walls dissolve and the whole school becomes your classroom.

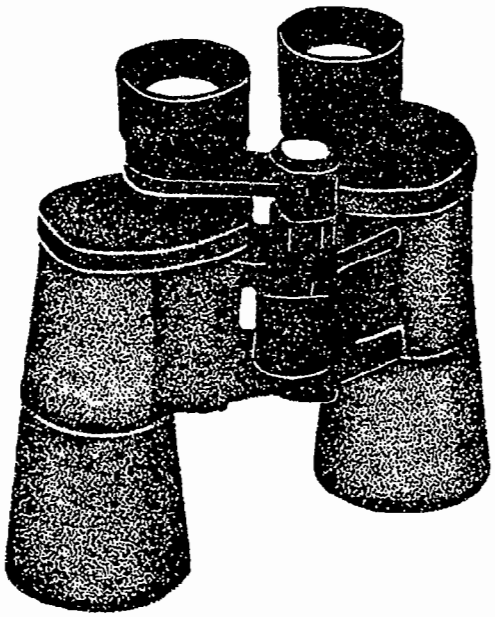

ACTIVITY ONE

BIRD NESTS

Learning Objectives:

Students will be able to 1) observe and describe the nest building adaptations of birds and 2) describe the importance of nest building materials and bird nest designs.

Method:

A variety of nest building materials are placed in and about the school site during the nesting season.

Background:

A single bird's nest may consist of several hundred to several thousand pieces. Each of these pieces represent an effort on the part of the nest builder to locate, transport, and arrange the piece at the selected location. The availability of suitable nesting material can be a limiting fact or can influence the selection of a place to build a nest.

There are many other factors that determine what species of birds will nest in any given location. It is impractical to plan on attracting birds to the school site with nesting materials alone.

But by determining first the species of birds that might be attracted to your school site, perhaps as a result of nesting structures you have provided or trees you have planted, you might supplement their nest building chore by ensuring the availability of suitable materials.

When people provide nesting materials, they can be placed where the activity of the birds can be observed. And by using identifiable materials such as colored yarn, it is often possible to see your offerings as part of the completed nest.

Materials:

Nesting materials such as: yarn of various colors, string, narrow strips of cloth, pet hair, cotton, old furniture stuffing, feathers, twigs, pine needles, etc. Baskets made of wire or other material, such as a bicycle basket, plastic berry basket, empty "suet" feeders, mesh onion bag, etc.

Procedure:

Place selected nesting materials in conspicuous spots around the school site. Materials may be offered from a wire or plastic mesh bag or basket of almost any style, secured to a post or tree, or hung from a branch.

Loose materials may be draped over a line or branches. Materials should be conspicuous and out in the open.

Pieces of stringy materials should be cut in lengths eight inches or shorter to prevent entanglement. Do not place the materials inside a nesting box. Bird visitors may assume it is already occupied.

Several species of Midwest nesting birds like the robin, phoebe, and barn swallow use mud to construct their nests. You can encourage nearby nesting by creating mud puddles during the nesting season. One way to offer mud, if there is no nearby stream or pond, is to provide a tray, such as a garbage can lid or birdbath top, sunk into some out of the way location filled with wet, sticky clay soil.

Your offering of nesting materials will have more meaning if it can be placed where bird visitors can be observed.

In the winter time, when nesting is complete, try to find bits and pieces of the nesting materials that you provided by locating

and observing birds' nests. With the leaves gone from deciduous trees, bird nests should be more readily apparent than in the summertime.

Natural bird nests should not be disturbed. Nest boxes should be cleaned out following the end of the nesting season. Some nests may be used next year as "platforms" for new nests; some are ecosystems of their own, hosting all kinds of bugs, beetles and mice, and others are protected by laws designed to protect their occupants.

Extensions:

1. Students can attempt the task of nest building by using natural materials such as sticks and mud or craft materials like glue and pipe cleaners. Who are the most efficient nest builders, people or birds?

2. In addition to wooden nest boxes for cavity nesting birds, some birds may be induced to nest on the school site by supplementing the natural habitat. Hardware cloth nesting cones for mourning doves and platforms for robins and phoebes are examples.

SOME COMMON SCHOOL SITE BIRD NESTS

CUP-LIKE NESTS:

Bird	Likely Nest Location	Materials
Robin	Tree, shrub (fork or branch), building ledge, or nesting platform; 3-25 feet	Twigs, coarse grass, weed stems, strings, rags; lined with mud and fine dry grass
Mourning dove	Tree, shrub, or old bird nest	Small twigs; lined with fine twigs, pine needles
House finch	Branches, cavities, old nests, ledges	Fine weed and grass stems, leaves, rootlets, twigs, string, wool, feathers
Ruby-throated hummingbird	Tree or shrub; 10-20 feet	Plant material, down, spider's web, lichens
Bluejay	Tree, shrub, or bush; 10-40 feet	Twigs or bark strips, rootlets, stems, paper, rags, feathers, mud; lined with rootlets, etc.
Northern Cardinal	Shrubby thicket or vine tangles; 4-5 feet	Twigs, stems, grasses, bark fibers, vines, rootlets, dead leaves, rags, paper; lined with grasses
American goldfinch	Tree or shrub; 3-10 feet	Plant fibers, bark strips, plant down, cotton, wool; lined with plant down

CAVITY NESTERS:

BIRD	NEST TYPE
Eastern bluebird	- Loosely built cup of dry grass, weed stems, fine twigs; lined with finer grasses
English sparrow	- Untidy, domed structure of straw, plant stems, paper, string, cloth; lined with feathers, hair and wool
House wren	- A base of twigs, stems, leaves, and fibers; lined with feathers, hair, etc.
Chickadee	- A base of moss and cup of plant down, fibers, hair, wool, feathers, and spiders' cocoons
Tufted titmouse	- A base of moss and dead leaves and a cup of hair, fibers, fur, wool, cotton, etc.
Tree swallow	- Dry grasses, pine needles, etc.; lined with feathers

Project WILD Connection:

The following Project WILD Activities provide additional background information and enhance or supplement this activitiy.

Adaptation Artistry
Bird Song Survey
Microtrek Treasure Hunt
My Kingdom for a Shelter
Urban Nature Search

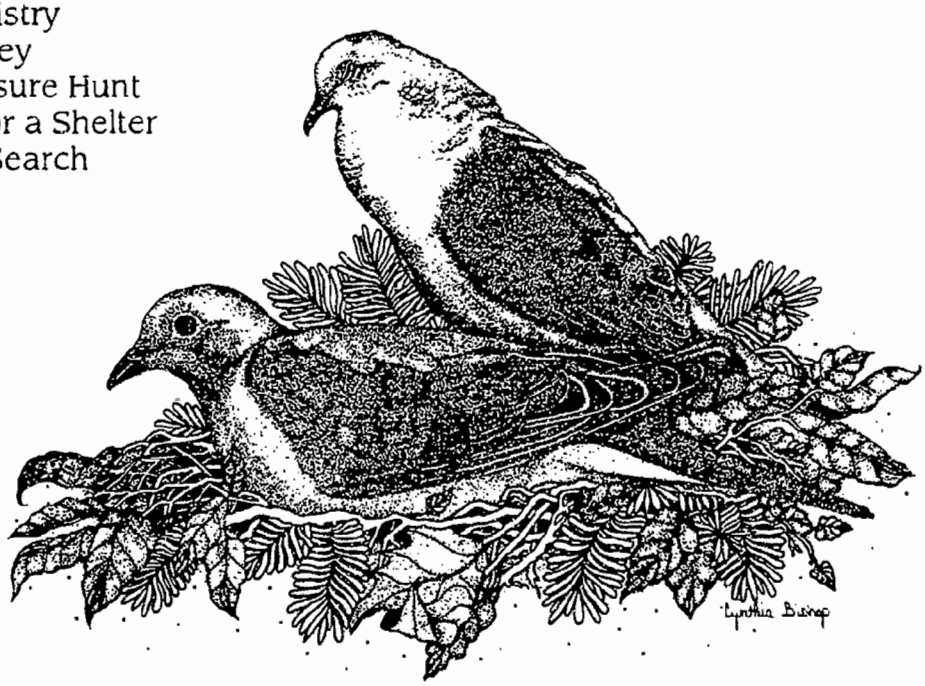

ACTIVITY TWO

REARING BUTTERFLIES

Learning Objectives:

Students will be able to: 1) describe the life-cycle of a monarch butterfly 2) describe the relationship between the monarch butterfly and the milkweed plant and 3) sharpen their observation and sensory skills.

Method:

Butterfly eggs and/or larvae are maintained and reared in a controlled enclosure until adult butterflies can be released.

Background:

The monarch butterfly is as familiar to many of us as the robin. The first orange and black monarchs of June tell us that summer is officially here.

Monarch butterflies are easy to rear; ample food, water, and space are inexpensive and simple to provide. The thrill of discovery, as the monarch chrysalis opens and the adult butterfly emerges to be set free to continue the cycle, is a valuable and powerful educational experience.

Materials:

Old aquarium, large fish bowl, gallon jar, or a cardboard box with windows of clear plastic wrap; butterfly eggs, larvae, or chrysalis; milkweed plants; and spray mister.

Procedure:

Monarch butterfly caterpillars are relatively easy to find. During the first few weeks of school (late summer), butterflies are still active and the host milkweed plants are easy to locate. Monarch caterpillars are the familiar green and black striped "worms", one to two inches long, seen in many fields or yards. If you're lucky, you might be able to begin this activity with a monarch egg*. The single eggs are very small, but distinctive. They are pinhead size, egg shaped, and ornamented with ribs and grooves.

Look for monarch eggs, larvae, or chrysalises on the common milkweed plant. Monarchs depend on milkweed to "host" their larvae form. The flowers are also a favorite nectar source for the adults. Milkweed is found throughout Ohio, likely on or near many WILD School Sites.

Monarch larvae or pupae are common and the species performs dependably. Other species, however, can be used if the life history and host plant preferences are known. Some biological supply houses offer living specimens with instructions; painted lady butterflies are often obtained this way.

The living caterpillar, actively eating leaves, should be collected plant and all and placed in its temporary home. Twigs and additional milkweed plant cuttings should be arranged to provide an opportunity for the larvae to move about, feed, and eventually attach and hang. The top of the jar or aquarium should be covered with a screen or cloth that provides plenty of air circulation. The result is an informal terrarium

Replace the milkweed plants with fresh cut ones when the leaves are mostly eaten or wilted. A fine spray of water occasionally from a plant mister will help keep the terrarium moist.

If the caterpillar stops eating, it may be just resting or it may be getting ready to shed its skin.

Study the chronology attached, "From Egg to Butterfly", so that you can track all that's going to happen.

The most thrilling moment of this activity is when you remove the cover to let the adult free to fly, feed, and reproduce. Adult butterflies should be released where the larvae or pupae were collected, or in an area of suitable habitat for monarchs; a location with lots of milkweed.

*Eggs may be difficult to find as the monarch reproductive period is often over by late summer as the adult form prepares to migrate.

FROM EGG TO BUTTERFLY

	Egg is layed	- The female monarch lays single eggs on the underside of a milkweed leaf
3-5 days later	Egg hatches	- A tiny, white, blackheaded caterpillar eats its way out of its egg case.
3-5 days later	Caterpillar	- The caterpillar is now recognizable as a monarch larva. It's fleshy white with yellow and black stripes and is 1/2 to 1 inch long.
2-3 weeks after hatching	Molting	- The outer layer of cells separates from a newer layer beneath and splits down the center. The caterpillar twists free and eats the old skin
3rd week	5th (final) molt	- The fully grown larvae stops eating and searches for a place to pupate
2-3 hours after final molt	Pupation	- The caterpillar spins silken threads onto the underside of a twig or leaf. It then spins a "pad" in the center
2-3 hours later		- The caterpillar spins and stacks coarse strands into a silky button in the center of the pad
In the next 12 hours		The larva (often overnight) grasps the button with its anal prolegs and hangs, curved in a U-shape The skin become translucent, revealing green pupal color
After 3 hours more		- The larvae relaxes and forms a J-shape The exoskeleton cracks and splits down the back.
In the next 5 minutes		- With violent gyrations, the new pupa thrusts off the empty skin. The pupa is segmented and soft and may pulsate
3-5 hours later	Chrysalis	The pupae hardens into a gold-speckled aquagreen, jewel-like chrysalis
The next 10 days	Transformation	- Phenomenal, internal changes take place The outer layer eventually becomes transparent and reveals orange and black wings inside
In the next 1-2 days	Butterfly	- The clear skin cracks along special fracture lines and a wet deformed-looking butterfly with crumpled wings and swollen abdomen emerges.
In the next 5 minutes		- Fluid is pumped from the abdomen into the wings and the wings unfurl
3 hours later		- The wings dry and harden. The fully mature butterfly is ready for flight

Project WILD Connection:

The following Project WILD activities provide additional background information and enhance or supplement this activity.

Color Crazy
My Kingdom for a Shelter
Wildlife is Everywhere

ACTIVITY THREE

MAKING SENSE

Learning Objectives:

Students will be able to 1) identify and interpret observations made with all their senses and 2) use observation skills to collect scientifically relevant data.

Background:

In order to understand the natural world and to apply learned concepts, certain scientific skills are required. One of the most basic of those skills is observation; using our senses to obtain information. Additionally, logical interpretation, experimentation, and accurate record keeping complete a scientific approach to thinking through a situation or question.

All too often observation, particularly in a familiar environment, is experienced mainly through sight. In order to more fully understand any environment, sounds, smells, textures, and even tastes should be included in our observations.

Materials:

Note pads; blindfolds; rope; cotton balls or ear plugs; field guides on wild edible plants.

Procedure:

Assign each student, or a pair of students, a study site where they can sit quietly as far from each other as possible.

Allow them 10 minutes to record their observations on a note pad. Provide only minimal instruction regarding their task for this part of the activity. "Write down everything you observe," might be instruction enough.

After 10 minutes or so, bring the group back together and review with them their observations.

Most students will record things that they see, a bird, a nearby flower, or other things that catch their eye. A few may record sounds, a woodpecker or a plane flying over would attract attention.

As the students share their observations, discuss with them their dependence on sight. Ask if any of them recorded tactual or odor observations.

Also discuss how they might have qualified or quantified their observations. One student may have recorded seeing "a bird," while another might observe "a small brown bird flying." Further, some students may have quantified an observation by recording "three woodpeckers, one sparrow," etc.

Ask the students to return to their study site and resume the task of recording their observations. This time instruct them to sit for a few moments blindfolded, and then a few moments using ear plugs and a blindfold. Ask them to record additional observations that they smell, hear, or experience by touch. Further, ask them to qualify and quantify their observations and to keep accurate records.

Tell the students not to be concerned with being able to name the plants or animals they observe. They can use a description of the bird's call to "name" the birds they hear. Many birds and animals are named this way. For example, the cuckoo, catbird, chorus frog, etc. received their names based on the sounds they make. An inventory of plants might be similarly named by their texture. Many plants received names based on texture: prickly ash, bristly greenbriar, shag bark

hickory, silky dogwood, and many others.

As the students return and share their observations, discuss the relationship between observation and interpretation. Use the information they gather to add to your inventory of WILD School Site features and wildlife.

Extensions:

1. Do not suggest that students taste unidentified plant material. However, "wild recipes" using plants from on or near the school site can add to the students' understanding and appreciation. Wild raspberry, blackberry, hickory nuts, walnuts, dandelion greens, sassafras root, crabapples, sumac and hickory bark can yield jams, jellies, syrups, and salads to sample and enjoy. Consult a field guide for information on wild edible plants.

2. To encourage the use of all senses, try masking one or two senses during a hike. Hand out cotton balls for everyone to plug their ears with and let students experience a soundless world while hiking. Another method is to use nose plugs or simply have students pinch their nostrils while hiking. Have students wear gloves to mask the sense of touch. The most dramatic sense to mask is that of sight. Tie a rope to a tree or other natural objects and lead the rope through several natural areas: tall grass, a meadow, different shrubs, or a moist area. Then blindfold students and have them explore the rope course without the use of sight

Project WILD Connection:

The following Project Wild Activities provide background information and enhance or supplement this activity.

Learning to Look, Looking to See
Seeing is Believing
Wild Edible Plants

ACTIVITY FOUR

WILDLIFE AT HOME

Learning Objectives:

Students will be able to 1) describe habitat features on the school site that serve as a "home" or shelter for wildlife and 2) relate the specific needs and habitat requirements of wildlife species common to the school site.

Method:

Closely examine and explore the school site for evidence of wildlife activity, looking specifically for wild animal "homes."

Discussion:

There is wildlife on your school site, no matter how large or small; urban, rural, or suburban. While you may not have the opportunity to actually see many of the more secretive or nocturnal wildlife species, you can find evidence of their activity.

This evidence may be a nest or a hole, some shed feathers, fur or skin, or some other feature where wild animal activity such as food gathering or nest building has left some sign.

Often people think of wildlife as large animals, like bears or deer, but wildlife includes animals we seldom notice: spiders, frogs and even the smallest insects.

The purpose of this activity is to recognize that we share the school sites with wildlife and that all environments provide for wildlife of some kind.

Students will also recognize that wildlife has specific needs when it comes to establishing a home. Each species requires a specific habitat that satisfies those needs.

Materials:

Paper; pens and markers.

Procedures:

There are several ways to survey and inventory the school site for wild animal homes:

1. Students working in pairs are given five minutes to find an animal, animal home, or some other evidence that an animal has been there. Each pair of students can then discuss or show what they found.

2. In advance, student leaders or teachers familiar with the school site designate a trail for students to follow. The path can be marked with string or flags. Animal signs or homes along the path can be identified with signs or markers. (The trail can be "salted" with evidence of animals: bones, feathers, etc.)

3. A hike is planned with wildlife homes and potential homes identified along the trail. Place a "For Rent" sign at each animal home. Students then take turns creating advertisements expounding the virtues of each potential wild animal's home. Here's an example: Rotten Log. *"Space for rent in multi-family dwelling, earth homes available. Rich soil for gardening. Well insulated."*

Here are some sample wildlife homes and other wildlife signs you might find:

Groundhog hole
Woodpecker hole
Shrew tunnel
Squirrel leaf nest
Spider web
Ant hill
Rotten log
Bird nest

Other wildlife evidence:

Feathers
Bones
Chewed leaves or bark
Footprints
Nut shells, cone scales (midden)
Beaver cuttings
Bird calling
Rabbit browse
Scat

Extensions:

1. A rotten log feature (Project 5) on the school site is a great place to explore for animal homes. A rotten log often reveals insect holes, ants, woodpecker holes, etc. In addition, the log will demonstrate interaction between the log and the plant and animal communities on and nearby the log.

2. A search of the school site for animal homes and signs might be repeated with a comparison of activity in the fall with the same features studied again in the spring.

Project WILD Connection:

The following Project WILD Activities provide additional information and enhance or supplement this activity.

Everybody Needs a Home
Keeping Score
My Kingdom for a Shelter
Microtrek Treasure Hunt
What's That Habitat?

ACTIVITY FIVE

THE BELLY HIKE

Learning Objectives:

Students will be able to 1) generalize that wildlife as a group includes very small organisms to very large animals in a vast variety of forms and 2) generalize that wildlife can be found in all areas even though it may not be immediately observed.

Method:

Designate a small area in each of two or more habitats (mown lawn, tall grass, forest floor). Explore the plot observing the variety of small living organisms.

Background:

When we think of wildlife, we usually visualize larger animals such as deer, raccoons, or even elephants. The large wild animals we're most familiar with are actually just a tiny percentage of the millions of species of living things.

In addition to a variety in size, wildlife is represented by extremes in a variety of design. Wildlife, from microscopic organisms through tiny insects to large mammals, exhibit a marvelous array of adaptations to help them survive.

The design of any animal and, its adaptations, in relationship to where it lives and how it survives, is called a niche. One way to understand niche as opposed to habitat is to accept habitat as where an animal lives and niche as the animal's job.

This activity explores often overlooked wildlife, those wild animals beneath us as we walk across a lawn or through a field. Within that world of the very small, we will discover nature's richness in form, function, and interrelationships.

Materials:

String, hula-hoop, or wire coat hanger; magnifying glass; writing materials.

Procedure:

Designate a study site for each student or pair of students. The study site can be as small as a coat hanger bent into a circle or a hula-hoop. A piece of string two to five feet long, tied in a circle can also be used to designate the site.

Site selection can be random within any appropriate habitat, such as the school site lawn. Simply toss the hula-hoop or other marker onto the lawn; that's your study site.

Students should carefully explore the site as if it were a tiny jungle. On their hands and knees or their belly, have the students carefully lay back the thatch, lift the leaves, and examine the jungle floor. A magnifying glass will help get a close-up look at some of the small organisms within the study site.

With note paper and a chart, ask the students to record their observations. They need not be concerned with the correct name of the tiny organisms they find. They should, however, make up a name, perhaps based on its features, such as "blue-big jaws" so they can count and further describe each organism.

Each observation can be recorded on a chart that includes: a description (size, shape, color), how it moves, how many were

found, what did it seem to be doing, etc. Students might also hypothesize about what the animal eats, where it goes at night, etc. A small sketch of each different animal can also be a part of the record.

The activity can be repeated in several different places that provide a variety of habitat types such as a forest floor, taller grass, or even a gravel parking area.

Extension:

1. One method of challenging the student to carefully record their observations is to assign them to be a visitor from another planet and to classify and describe the organisms they discover when they arrive back "home." They can also then draw conclusions about life on Earth from what they record.

Project WILD Connection:

The following Project WILD Activities provide additional background information and enhance or supplement this activity.

Ants on a Twig
Interview a spider
Microtrek Treasure Hunt

ACTIVITY SIX

INSECT SAFARI

Learning Objectives:

Students will be able to: 1) describe the relationship between insect structure and function and 2) recognize that wildlife includes both small and large animals in a variety of forms.

Method:

Students will explore the school site for insects.

Background:

Wildlife is diverse. Wild animals occur in a variety of forms that help them exist in a wide variety of habitats. Many people only think of familiar birds and mammals as wildlife. Wildlife, however, includes fish, reptiles, and amphibians. Wildlife also includes insects, spiders, worms, and invertebrates.

In number of species and by actual count, insects far exceed all other groups of animals. Ants, grasshoppers, dragonflies, sow bugs, and other crawling and flying "bugs" come in a tremendous variety of forms, and exist in almost every imaginable habitat, including every school site in the world.

From school building windows and cracks in the sidewalk (Activity 14), to grassy fields and the open air, insects are everywhere.

Wildlife diversity refers to the number of different kinds of wild animals living in an area. One way to assess the general environmental quality of an area is to evaluate its ability to support a variety of wildlife. The more diverse the habitat, the more likely different kinds of wildlife can live there. By examining the diversity of insects collected at different locations on the school site, some relationships between insect diversity, habitat diversity, and how each depends on and interacts with the other can be inferred.

By collecting and examining insects from a variety of places on and around the school site, students begin to appreciate the concept of diversity and the variety of form and related functions among the insects.

Materials:

Plastic bottles, milk cartons, plastic bags, or other temporary carrying and observation containers for insects; sweep net or fine mesh butterfly net, homemade or purchased; "Bug Boxes", magnifying glasses or a hand lens; clear plastic sheet approximately 36 inches by 60 inches; soft-bristle paint brushes.

Procedure:

Students might begin by examining microhabitats within the classroom or school building. Even in the cleanest building you can usually find evidence of living or dead insects. Look along baseboards, in corners, around light fixtures, and behind books and other items on shelves for moths, ants, flies and other insects.

C Bishop

Be prepared, however, for the few insects that will likely not survive. Deal with this dilemma on a case-by-case basis. Encourage the students to be careful with living organisms, but not feel guilty if a few insects die.

Extension:

Larger flying insects like grasshoppers can easily be captured with a plastic sheet. A team of four each takes the corner of a 30-inch by 60-inch piece of clear plastic. The team walks through the grass and quickly pulls the sheet down trapping all the insects below. Larger insects will appear against the plastic as they try to escape.

Project WILD Connection:

The following Project WILD Activities provide additional background information and enhance or supplement this activity.

Ants on a Twig
Grasshopper Gravity

ACTIVITY SEVEN

TRACKS!

Learning Objective:

Students will be able to identify common animal tracks.

Method:

Students make plaster casts of animal tracks.

Background:

Looking for evidence of wildlife is one method of determining what types of animals are on or near the school site. Signs such as burrows, nests, droppings, or food litter can be used for animal identification, but some of the easiest signs to interpret are animal tracks.

Animal tracks can be the basis for several types of investigations. Identifying the tracks that you and your students find will help you develop a species list of those animals found near your school. Habitat requirements of individual species can be determined by finding their tracks in certain areas and not finding them in others.

Track hunting is really very easy. Just find a spot of level ground with fairly soft, fine, textured soil. Smooth it over and come back later to see what has been there! Obvious places for your smooth spot would be near water or on well-worn trails. Larger animals will use the more open areas, while a cleared small spot under some bushes, the size of your hand, may reward you with many different little tracks of mice, shrews, and reptiles.

Tracks can be preserved and collected by making plaster casts of them. This simple procedure will allow you to "collect" tracks and add them to other evidence like bones, nests, or scats that you already may have collected.

Once these tracks have been observed or preserved, information about the animal that made them can be discovered. For example, all mammals have basically the same foot structure. They just use the parts in different ways. If we look at an animal's foot in relation to the human hand, we find that some animals walk on their hands—like raccoons and bears. Others walk or run on their toes, like cats and coyotes, while some walk on their "toenails" or hooves like deer and elk.

By looking at a track, we can make some determinations about how that animal lives. We can notice what part of the foot it walks on, whether claws are present, and how many steps are taken in a measured distance.

The major purpose of this activity is for students to become sufficiently familiar with evidence of wildlife to be able to identify a few animal tracks common to their area.

Materials:

Plaster of Paris; containers; spray shellac or plastic; vaseline; cardboard; knives; sandpaper; black ink or paint.

Procedure:

1. Look for tracks on or near the school site, near a lake or stream; somewhere where there will be lots of tracks. On some school sites a baited tracking plot (Project 3) will provide the tracks for this activity.

2. Once a track is found, clear it of loose particles of soil, twigs, leaves, and other litter.

3. Spray the track with shellac or plastic from a pressurized can if available.

4. Form a two-inch wide strip of cardboard or tin into a ring surrounding the track. Press firmly into the ground to give support.

but allow at least one inch to form the edge of the mold for the plaster. Square forms can be made by cutting milk cartons horizontally—one of the easiest ways to make the forms! Simple round forms can be made by cutting both the top and bottom from a tuna or cat food can or a plastic margarine tub. Stapled strips of cardboard in the shape of a circle can also be used.

5. Mix about two cups of plaster of Paris in a tin can or plastic bowl, adding water slowly until it is about as thick as heavy cream. Pour carefully into the mold until the plaster is about to the top. Allow plaster to harden at least 15 minutes before lifting it out of the track. If the soil is damp, hardening may take longer.

6. When the cast is hardened, lift the cast out, remove the ring, and clean the cast by scraping it with a knife blade and washing.

7. Back in class, apply a thin coating of vaseline to the track and surface of the cast. Place it on a flat surface and surround the casting with a two-inch strip of cardboard or tin as before.

8. Mix plaster of Paris and pour it into the mold, making certain that the top surface of the casting is smooth and level with the mold. If you plan to use the casting as a wall plaque, place a loop of wire in back of the casting while the plaster is still soft. Allow two hours for plaster to harden.

9. Carefully remove the mold when the plaster is dry. Separate the two layers and wipe the excess vaseline from the face of the cast and track. Scrape any rough places with a knife blade, or use fine sandpaper to smooth the surface. Wash the completed cast in running water.

10. When the cast is thoroughly dry, paint the inside of the track with India ink or black poster paint. Label each cast with the name of the track and the student's name. A coat of clear shellac or clear plastic may be applied to protect and preserve the casting.

Extensions:

1. Tracks for this activity can be created using preserved feet of wild animals such as wild turkey or deer. Simply press the preserved feet into soft, fine soil. (Contact a local taxidermist for assistance in acquiring feet.)

2. Some educational or biological supply companies market plastic or hard rubber molds for creating plaster casts of animal tracks. These molds may be a more practical method of creating casts or serve as practice for a field trip.

3. Tracks can be the focus of a discovery activity using created rubber stamps of tracks (rubber shoe cushions make good stamps) and field guides. A fun matching activity is to mix and match tracks and pictures of selected wild animals.

Adapted from: Project WILD © 1992, Western Regional Environmental Education Council

ACTIVITY EIGHT

SEED NEED

Learning Objectives:

Students will be able to: 1) explain how seeds are carried by animals and 2) evaluate the importance of wildlife as contributors to ecological systems.

Method:

Students gather seeds by going outside and wearing socks over their shoes.

Background:

Wildlife contributes to the diversity and balance of ecological systems. One compelling example is in the process of seed dispersal. Many seeds are carried by animals—whether in the coats of fur-bearing animals or carried and dropped by birds (Project 2). Animals distribute seeds in other ways too. For example, some creatures, like wood rats and squirrels, gather seeds and store them. Some of those seeds are not eaten and the seed cache becomes a plant nursery. Many seeds are eaten, but not fully digested. In those cases, animals distribute and often fertilize seeds through their droppings.

Materials:

One large fuzzy sock per student; masking tape; magnifying glass or hand lens.

Procedure:

Ask each student to bring a large, old, fuzzy sock from home--or try to find an inexpensive or free source to obtain a sock for each student. Old socks with holes in them are fine for this activity. Ask each student to put on a sock over one shoe. Wearing the socks over the shoes, go on a walk through a grassy area or field - particularly one that is abundant in seed-bearing plants. (Masking tape over the foot or around the leg sometimes has more sticking power!)

After walking through the area, look carefully at the socks. What has happened?

The students should carefully remove their socks. They've gathered their "data"—seeds and other things attached to their socks. After removing the seeds and other particles from the socks, they should examine what they've brought back. Talk with the students about the major kinds of things they've collected— like seeds, grass, small bits of twigs. Next discuss the seeds in more detail, talking about the different kinds of seeds they have found: round, skinny, big, small, etc.

Each student should record, with words and small drawings, the kinds of things on the sock. Tally the number of each kind of thing on a sock as well.

Ask the students how different animals' fur might be similar to their socks. Has anyone ever brushed seeds, stickers, and things out of a dog's or cat's fur? Talk with the students about how, so often in nature, seeds are carried by animals almost like the way they carried seeds and things on their socks. Seeds may stick to an animal's fur in one location, and fall off in another. Discuss why such a process is an important one. Evaluate the consequences. How does wildlife contribute to environmental diversity?

Extensions:

1. Have different students walk in different locations. Contrast the seeds found in each location. Create an environmental map of the ecosystems' differences represented by the collected seeds.

2. Each student can plant his or her seeds in a shoe box filled with planting medium (soil or a commercial mix). Water and care for the shoe-box gardens on a regular basis and see what grows! NOTE: Many wild plant seeds require freezing before they will germinate. If there is a question, put some seeds in ice cube trays and freeze them for several days. Then plant them. Even after freezing, some seeds may not sprout. Some seeds

require scarring, scorching by fire, or digestion by an animal before they will grow. Also, some seeds are not viable and will not germinate or sprout (Activity 10).

3. As the seeds in the boxes begin to sprout, measure the plants that grow. Take measurements every fifth day, and plot these measurements on a graph.

4. Ask the students to try similar experiments at home, using seeds you find on your own or a neighborhood pet. If you actually get the plants to grow, you can try to match the plants you grow at home from the "pet-carried" seeds to the plants growing outside. Try to figure out how far the seeds might have traveled on the animal!

Adapted from: Project WILD © 1992. Western Regional Environmental Education Council

ACTIVITY NINE

AQUATIC COLONIZATION

Learning Objectives:

Students will be able to: 1) describe and define colonization, 2) identify some of the organisms that colonize a small body of water, and 3) identify factors that influence the rate of colonization.

Method:

Observe the changes that take place in a semi-permanent body of water by creating a "water hole" using a wading pool.

Background:

During wet weather, low-lying ground may hold water for several weeks. When the "water hole" first appears, it is just a puddle, void of any living things observable with the naked eye. But in just a few days, colonization transforms the puddle into a mini-pond, teeming with life.

Several things influence the rate and degree of this kind of colonization: the time of year, the temperature, how long the water remains, and the proximity of the water hole to established aquatic communities such as a lake, pond or stream.

Colonization also functions within terrestrial ecosystems. Other activities in this collection demonstrate the movement of terrestrial animals into created or vacant habitat. A plowed field allowed to succeed to grass and weeds soon supports insects, birds, and small mammals. These creatures "move in" to the vacant habitat.

Materials:

Hoes and shovels; rigid plastic wading pool(s); burlap; tape; string; hose or buckets.

Procedure:

Site selection is important. The site should be level, easy to excavate, near a water source, and relatively sunny.

The best results are achieved by digging a hole that will hold the pool with the rim flush to the ground. A pool liner of burlap, held in place with a few rocks and taped or tied to the rim of the pool creates a more natural appearance and a substrate for eventual colonization.

Fill your pool with tap water.

Set up a schedule of observations and measurements. You could track and plot water temperature, water clarity, water level, and, of course, number and kind of organisms. Plan on at least nine weeks of observations and records.

The speed and variety of colonization will depend on the factors discovered. But almost every pond will show signs of algae, insect larvae, and aquatic invertebrates.

Eventually, expect the water to become stagnant. The kinds of organisms now present will be indicative of changes in the water quality.

Extensions:

1. A "controlled" experiment, using two ponds, demonstrates the impact of water fertility. By adding two handfuls of garden fertilizer to one pond, comparisons in the rate and variety of colonization can be noted.

2. Other measurements can be taken and used to infer the relationship between water

quality and colonization. Simple kits and supplies are available to measure dissolved oxygen and acidity.

3. If you have been able to locate or create a rock and boulder feature (Project 20) at your school site, you can observe how plants and animals eventually colonize rocks. Lichens, algae, grasses, and eventually worms and insects will establish themselves on the rock. Look for and compare rock and boulder features that may have been "in place" for different lengths of time.

Project WILD Connection

The following Project WILD Activities provide additional background information and enhance or supplement this activity.

Pond Succession
(Also, see Activity 18)

ACTIVITY TEN

SEED AND SOW

Learning Objectives:

Students will be able to: 1) identify seeds as one means of plant reproduction 2) describe a variety of seeds, and 3) qualify conditions required for some seeds to germinate.

Method:

Observe, identify, and mark the plants used by wildlife and attempt to propagate the species by collecting their seeds and sowing them in containers or prepared sites.

Background:

Sowing collected seeds is not only a low-cost means of providing plants attractive to wildlife, it also offers an opportunity to become familiar with the complete life cycle of a variety of plant species.

Seed bearing structures vary. Seeds occur in a variety of shapes and sizes. Some seeds disperse suddenly—the pods of jewelweed spring open, scattering their seed as they are brushed by a sleeve. A gust of wind carries dandelion and milkweed seeds to new sites. Students should carefully note the conditions under which the parent plants grow and choose similar locations for the gardens where they will plant their seeds or seedlings.

Plants produce seeds throughout much of the year; viable seeds are generally available from wild growing plants. Students can choose plants for school site gardens based on personal observations of birds using the seeds, butterflies sipping nectar from flowers, or caterpillars, rabbits, and other herbivores eating the leaves. The local library is also a good source for information about what local plants are attractive to wildlife.

The flower structure serves as the nursery for developing seeds. Most plants are readily identified by their flowers. It becomes a simple matter (sometimes) of waiting for the flower to wither and the seeds to develop and mature. Collected seed materials should generally be dried, separated from their associated hulls, chaff or seed capsules, and stored in a cold, dry location.

Germinating seeds requires knowledge, patience, and some good luck. Under ideal conditions, some seeds can germinate after centuries in storage. Still others require a complex series of exposures to heat and cold before they can grow. In general, those seeds which are dried thoroughly and then kept cold (34-41° F.) before planting have the best chance of growing.

Collecting seeds poses little threat to common native perennials if done so that the mature plant is not seriously damaged. Students should think through the effects of their actions before collecting seeds from annuals which require seeds to produce the plants for the following year. Of course, students must have permission before entering private property to collect seeds and must obey those regulations which prohibit collecting seeds from public wildlife areas and state or local parks.

Materials:

Flagging tape or colored yarn to mark plants; plant identification books; coin envelopes or small empty pill containers; pots and potting soil or prepared garden sites; plant labels; permanent magic markers.

Procedure:

Determine the site for your garden and identify those plants you wish to include. Mark the plants from which you will collect seeds with flagging tape or colored yarn and monitor their condition weekly. Collect the seeds after they mature and before they are shed from the plant. It may be necessary to enclose seed heads in a small paper bag or other device to keep the seeds from being dispersed before you collect them. Maturing seeds darken as they ripen and the outer shell becomes dry. Spread collected seed heads on newspaper in a warm, dry location for several days. Clean the seed, removing

hulls, broken seed capsules, and other extraneous material. Some seeds are large, and easily separated by hand. You may need to exercise some ingenuity in order to separate hulls from other seeds. A series of successively finer sieves may be needed or perhaps a light current of air from a fan or blown through a straw will separate the chaff from the seeds. Some seeds should be sown immediately, others may need to be stored until weather conditions are right for their growth. Those which are to be stored should be dried for several more days and then stored in a pill bottle in the refrigerator for future use.

You will find additional information concerning seed germination regimes in many plant catalogs (for example, Burpee or Park). Wild flower enthusiasts have studied ways to propagate many native plants. Many publications contain details about growing and propagating wild flowers; consult the appendices.

Extensions:

1) Dried wild plants and seeds provide a unique and naturally appealing medium for art projects.

2) Collect enough seeds from like plants to experimentally determine the best conditions for germination. Vary the temperature at which they are stored, the amount of moisture they receive, etc.

3) Some wild growing plants are best propagated by means other than planting their seeds. Explore dividing clumps of a plant or taking a "cutting" to start new growth.

SUGGESTED PLANTS FOR THIS PROJECT

Species	Collecting	Growing
Scarlet Runner Bean •hummingbird	Annual. Wait until pods are papery and brittle. Late summer thru fall.	Plant after soil has warmed in spring
Anise Hyssop •butterflies use nectar, goldfinches eat seeds	Perennial. Seed head turns brown and brittle. Crush heads between fingers to release seeds. Late summer thru fall.	Sow on rough soil in a sunny spot at any time
Sunflower •nectar - bees and butterflies, seeds eaten by many species of birds and mammals	Annual. Pistil structure will brush off and seed hulls will be dark and hard.	Store in refrigerator, plant late spring when soil is warm
Purple Coneflower •nectar - butterflies seeds - goldfinches	Perennial. Collect seeds in late fall when heads are dry and brittle.	Requires a moist, cool period. Need light to sprout
Cardinal Flower •nectar - hummingbird	Perennial. Seed capsules turn brown and become brittle. Seeds are very small.	Requires a moist, cool period. Need light to sprout

SUGGESTED PLANTS FOR THIS PROJECT

Species	Collecting	Growing
Milkweed •nector - butterflies, moths foliage - caterpillars several species of plants	Perennial. Collect seeds just before pods open in fall	Can plant at any time or store dry in refrigerator
Dill •foliage - black swallowtail caterpillars nectar - variety of small beneficial wasps	Annual. Collect when seeds turn brown midsummer thru fall	Can plant at any time or store
Columbine •nectar - hummingbirds foliage - caterpillars and leaf miners	Perennial. Collect when seed capsules turn brown and split open	Requires a moist, cool period to break dormancy and light to germinate
New England Aster •nectar butterflies	Perennial. Collect seeds when bristles expand and become fluffy	Many seeds are not viable. Sow immediately outside for best results

Project WILD Connection:

The following Project WILD Activities provide additional background information and enhance or supplement this activity.

Seed Need (Activity 8)
(Also, see Activity 2)

ACTIVITY ELEVEN

AT THE BIRD FEEDER

Objectives:

Students will be able to: 1) generalize that wild birds have food and feeding preferences, and 2) observe and record bird behavior at feeding stations.

Method:

Students will vary the type and presentation of food at bird feeders at the WILD School Site feeding station and then observe and document the results.

Background:

The feeding station (Project 4) may be one of the most active and functional projects at the WILD School Site.

Even the simplest arrangement of bird feeders can provide opportunities to observe a variety of birds and bird behavior.

Birds use a lot of energy for their size and need quite a bit of food. Eating and hunting for food takes up much of their time. The foods they prefer and the method by which they prefer to feed have resulted in unique adaptations in their beaks, feet, appearance, and behavior.

Most of the birds attracted to feeding stations are seed eaters. In addition, many birds that eat insects in the summer months are readily attracted to suet (beef fat).

By varying the kind of food and how it is presented, students can witness some unique behavior characteristics and draw some conclusions based on these variables.

Materials:

If you do not have an established feeding station, erect a simple platform feeder where bird activity can be observed. Refer to Project 4 for details.

An assortment of bird seed such as cracked corn, sunflower, and white millet; jar lids flower pot drip trays or a similar container to hold the bird seed; elbow macaroni; food coloring; and cut outs or models of birds, snakes, etc.

Procedure:

Once a feeding station (or a single bird feeder) is established, there are many activities you can do to observe bird behavior. By varying the type of food, how it is presented, or by introducing a distraction, bird behavior can be observed.

Bird Feed Preference:

Select bird seed that the students suggest birds might eat. Other foods that might be suggested such as bread crumbs, peanuts, or cereal can be used to extend this activity. Familiarity with the diets of local seed eating birds will be helpful in making selections. Ask the students if they can predict which foods are the favorites among the common bird visitors.

Bird food is often sold premixed. However, many specialty and garden stores sell different wild bird seed separately. A pound or two each of corn, sunflower, millet, milo, wheat or other available grain should be readily available.

In order to quantify which food offering is actually preferred by which birds, a few simple guidelines should be followed. 1) Food should be provided in similar amounts. 2) Different seeds should be offered in the same manner. 3) The birds should be counted the same way each time.

A simple way to conduct this activity is to put equal amounts of three or four grains in the same kind of container. Small clay drip trays for potted plants work well. Arrange the drip trays on a platform where birds have been feeding, or simply place them on the ground. Put an equal amount (1/2 to 1 cup)

of different seeds into each container. Birds can be counted and observed as they select their preferred food from among those offered. Another option is to remeasure the food after a set period of time and see which offering was most eaten. There is the possibility of competition from mice or squirrels for the bird seed that should be considered when tabulating how much food was eaten.

Be sure to record your results each time to compare with information collected later.

Color Preference:

Many common birds such as blue jays, English sparrows, and starlings relish table scraps. In this activity, cooked macaroni is offered as food.

Add food coloring to cooked macaroni and offer the birds their choice of blue, red, green, or uncolored food. How do your students think the birds will react to colored food?

Ask the students to design a feeding station experiment to answer this question.

Interference:

Make or purchase cut outs or models of a snake, owl, or other bird.

Place the artificial visitor near the food supply. How do your students think the birds that normally visit the feeding station will react?

Using string and screw-eyes, the artificial visitors can be made to move when birds approach. Ask your students to predict the birds' reactions and then test their hypothesis.

Extensions:

There are other experiments you can design to observe bird behavior. You could hide food under clear plastic or a handkerchief, you can vary the color or texture of the feeding platform, or you can add noise or movement at the station. Develop your own ideas of ways to monitor behavior.

Project WILD Connection:

The following Project WILD Activities provide additional background information and enhance or supplement this activity.

Adaptation Artistry
Too Close for Comfort
Bird Song Survey
Carrying Capacity

ACTIVITY TWELVE

COLOR ME SAFE

Objectives:

Students will be able to: 1) describe the significance of color to wildlife survival, and 2) list and describe how local animals use color to help them survive.

Method:

Students will participate in activities in which they use common or created objects to demonstrate how color helps wild animals survive. The students then survey the school grounds for animals that demonstrate the role of color.

Background:

Hunters, soldiers, and photographers often use camouflage clothing to help them hide. The clothing, often green and brown with bold patterns, is even sometimes "in style" at clothing stores.

Wild animals also use camouflage. An American toad's brown mottled skin helps it blend in with the leaves of the forest floor. A fawn's spotted coat helps it "disappear" when sun and shadows dapple its brushy cover. Some insects are green or brown and even shaped like leaves or sticks to help them escape predators.

Some animals exhibit bright colors that help them survive. Yellow and orange are often warning colors. Predators recognize that the brightly colored animal is not good to eat or possibly poisonous.

Other colors in wildlife might help attract a mate or warn of danger.

You don't have to venture to the field or forest to find examples of how color is useful to wildlife. Even the most urban school sites can host wildlife that exhibits the significance of color.

Materials:

Small food items in at least three different colors such as colored pasta, marshmallows, beans, etc.; common items (e.g., a comb, pencil, bookmark, hat, etc.); art supplies; pencils; and notebook paper.

Procedure:

Discuss with your students the concept of protective coloration. Introduce the idea of camouflage or a warning color. Have the students brainstorm a list of familiar animals that use color in some way.

Any or all of the following activities should precede a school site search for wildlife:

Collect small colored food items, 10 or more each of three different types. For example, 10 pieces of green pasta, 10 brown beans, and 10 yellow miniature marshmallows. Good colors for this activity are green, brown, and yellow. Randomly scatter the items in a designated area, such as a lawn bounded by a sidewalk.

Students, in teams or pairs, spend a timed turn seeing how many of each color they can find.

Have each student bring a small (hand-sized or smaller) item from home: a favorite model, a hairbrush, a baseball card, anything easily handled. Each student in turn hides the object on a designated portion of the school grounds where they think color will help conceal it. The objects must be placed in open view. Students then, in pairs or small teams, search the area and record (but do not remove) the items they discover.

Using any of a variety of craft materials and vegetables, such as raw carrots or potatoes, have the students create their own animals that use color and habitat to help them hide. Proceed as above with students in turn

hiding and seeking each other's creations.

The follow-up activity is a search and inventory of the school site to observe and record real wild animals and how color may enhance their survival. At more urban sites, search shrubbery, tree trunks, building corners and lawn areas for small insects, etc.

At WILD School Sites with more diverse habitats, you might observe small mammals, amphibians, and birds as well as insects. Almost every wild animal you discover will exhibit some significance in its color.

Students should record the animals observed at the school site and make notes suggesting how color helps them survive.

Project WILD Connection:

The following Project WILD Activities provide additional background information and enhance or supplement this activity.

Color Crazy
Surprise Terrarium
Learning to Look, Looking to See
The Thicket Game
Seeing is Believing

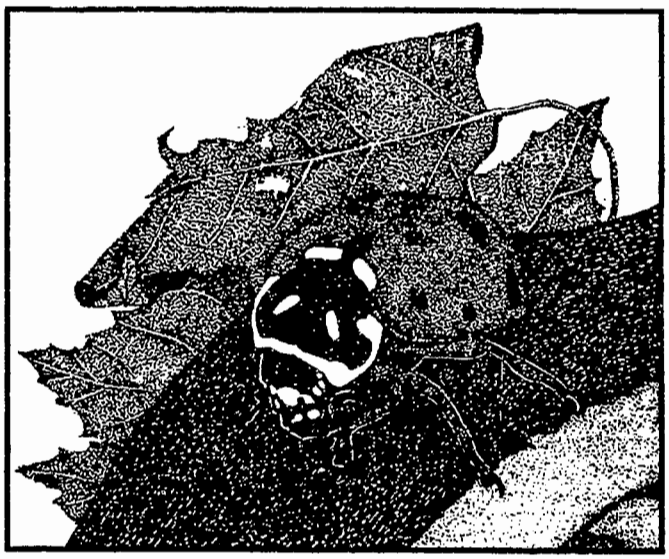

ACTIVITY THIRTEEN

FROM HERE TO THERE

Objectives:

Students will 1) identify and inventory physical, cultural, and biological features of a selected site, and 2) create a map that includes these characteristics.

Method:

In small groups, students identify WILD School Site features and create a map that can be used to plan WILD School Site enhancement projects and other activities.

Background:

Inventory and mapping are often the first steps in developing a comprehensive "plan" for the WILD School Site.

In addition to identifying the existing natural and human-made features of the site, mapping can provide a place to arrange and model proposed and planned enhancements. A map of the school site provides a way for you to view inventory information in a single clear format as you make decisions about habitat enhancements.

Even if your site is small and includes only a few simple projects, map making is an excellent integrated curriculum project. By making and studying maps, students use critical thinking and problem solving skills.

There are existing maps that include your school site. A good place to begin is with the study of a county or city highway map. Features of the school community can be analyzed.

Map making can be as simple as creating a "picture" of the school site identifying permanent features or a complex comprehensive activity involving overlays, precise measurements, and detailed representation of everything from elevation to soil types.

Materials:

Poster size paper, marking pens, an outline map of the study area, glue sticks or clear tape, a compass, and flagging.

Procedure:

For this activity, students will be assigned to map (draw and identify) selected features at a study site.

1) Select a land area easily defined with markers (flagging) or other suitable boundaries. It may be an entire school site or a designated part of any outside study area. The selected site should provide a diverse collection of features to be considered.

2) Create a rough outline map or "base" map, to provide to participants. The outline should serve as a starting point only, selected features will be added to the map by participants.

3) Divide the group into manageable teams. Each team will be assigned to map only selected features within the study area.

4) Explain to each team their mapping assignment. Each will be given a "base" map which identifies the border features of the study site. Give each team paper and markers. Team mapping assignments should include:

a) Natural and historic features; this should include any non-living permanent feature of the study site such as rocks, hills, streams, and other features of significance.

b) Vegetation: trees, grass landscaping, etc.

c) Existing wildlife habitat; animal signs or wildlife observed.

d) Dedicated space such as play areas, sidewalks, and buildings.

5) Instruct the teams to draw or color the features they identify with marking pens.

They may use symbols, colors or drawings to represent the features. Groups should also be instructed to orient their maps with "north" being the top of the paper and to create a scale which represents relative size of significant features and a legend for any symbols used.

6) Back in the classroom, create a composite map that includes the features from each team's map.

As mapping skills improve and more time is spent refining the first efforts, and as enhancements are added to the school site, your map will become a permanent tool and record for your WILD School Site.

Extension:

1) Eventually, you may want to extend this activity by determining additional details to add to your map, creating overlays, or perhaps a three dimensional model.

Additional details such as soil types, elevation, and other geological information can be found on topographic maps, county soil survey maps, and Geological Information Survey (GIS) maps. These are often available from the Natural Resources Conservation Service in your county, a university Extension Service office, or the Division of Geological Survey of the Ohio Department of Natural Resources.

Project WILD Connection:

The following Project WILD Activities provide additional background information and enhance or supplement this activity.

Habitracks
Urban Nature Search Habitreking
Wildlife is Everywhere

ACTIVITY FOURTEEN

CRACKS IN THE SIDEWALK

Learning Objective:

Students will be able to: 1) use observation skills to find signs of animals living in the cement and blacktop areas of the school yard, and 2) surmise how this habitat is able to sustain life.

Method:

Using a scavenger hunt as a guide, students will hunt for wildlife and wildlife clues in non-typical areas of their school site.

Background:

Wildlife species are often thought of as creatures of the field or forest, or at least living far from human disturbance. Wildlife, in fact, is everywhere (Activities 5 and 6). Wildlife species come in many sizes and live in many places, yet, each shares similar needs.

Too often the urban school site is dismissed as a place for wildlife observation and education because of the predominance of cement and blacktop. In this activity, students will focus on those features as they look for specific wildlife and wildlife clues in a scavenger hunt list.

All school sites, regardless of how urban, provide many places that may hide and shelter wildlife. Here is a list of features that might be included as boundaries are established for the hunt:

Sidewalk

Parking lot

Side of school building

Foundation and windows of school building

Fence surrounding school site

Benches or picnic tables where available

Access lanes, driveways

Play areas

Flower beds

Trees

Railings

Trash cans

Bare soil paths

Sign posts and poles

Materials:

Scavenger hunt lists, pencils, and hand lenses.

Procedure:

Before going outside, brainstorm with the students about the kinds of animals they might find and where they might find them.

Set boundaries for the study site area. Distribute a scavenger hunt list to each pair of students. Instead of collecting items, students should record their observations on their lists.

Students should be encouraged to carefully observe each feature within the hunt boundaries. They should look up, over, and even under each feature.

Scavenger Hunt List:

2 signs of birds

1 camouflaged animal or insect

1 round animal

1 fuzzy animal

1 segmented animal

5 things that are green

1 leaf with a hole in it

Something soft

1 seed

1 brown animal

2 places where you could find water

1 animal with wings

Something with roots

1 animal with more than four legs

1 animal on a plant

1 animal in a crack

1 animal under something

1 animal on the building

1 animal near a fence or sign post

1 animal that is a mammal

After students have completed the scavenger hunt, gather together and discuss their findings. What animals did they find? What did they find that is food for an animal? Did they find water? Was there shelter and space for the animals?

Extensions:

1) Complete the same scavenger hunt in a nearby green space or in a walk around the block. Compare the findings in the different habitats. Do they both have the same kinds of wildlife?

2) Ask students what kinds of animals they would like to have in their school yard. Have them research the animals and their habitats. Discuss what changes would have to be made to the school yard to support these animals.

3) Have one of a pair of students take the role of photographer and the other student play the camera. The photographer guides the camera (whose eyes are closed) to a wildlife habitat. The photographer positions the camera and when he/she gives a signal (such as tapping the shoulder once to open and again to close), the camera opens his/her eyes and takes the picture. The photographer should have the camera take pictures of a variety of places and animals and then the two should exchange roles. After both have had a chance to be the camera, each should choose his favorite animal in its habitat and draw a picture of it. Have a viewing of the pictures and discuss the animal and its environment. (Adapted from "Sharing the Joy of Nature" by Joseph Cornell).

Project WILD Connection:

The following Project WILD Activities provide additional background information and enhance or supplement this activity.

Ants on a Twig
Wildlife is Everywhere
Keeping Score

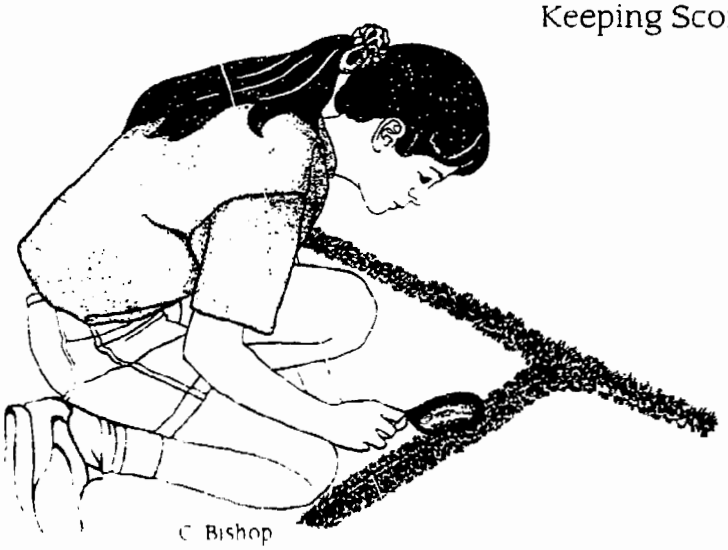

ACTIVITY FIFTEEN

COUNTING CRITTERS

Objectives:

Students will be able to:

1) demonstrate procedures for quantifying wildlife populations, 2) estimate the number of certain species of wildlife in a given area, and 3) generalize that wildlife populations vary in size according to habitat and time of year.

Method:

Students create transects with sampling points and grids with sampling quadrats, conduct an inventory, and then tabulate and compare findings.

Background:

Wildlife biologists often need to know the population size of a wildlife species in a given area in order to study and manage that species and its habitat. They are able to count animals, detect changes in populations, and detect movement by using sampling techniques such as a transect or quadrat count.

In some cases, counting each animal one by one can be accomplished if the population is small. An example might be peregrine falcons living in Ohio where nesting pairs are easy to locate. On the other hand, counting the number of deer one by one in Ohio is an impossible task. As a result, wildlife managers have developed various sampling techniques to estimate wildlife populations. Some popular sampling methods include aerial surveys (counting animals from a low-flying aircraft), and performing bag checks of hunters and creel surveys of anglers to find out what and how many animals they have harvested.

Transecting a study area is an effective method of estimating the population of a given animal in a specific area. Transecting involves designating a path (transect) for a determined distance and stopping at designated sampling points along the transect to gather information. A quadrat census is another sampling technique that involves counting all the individuals in a small, measured area of a study site and then multiplying that count by the number of small areas (equal in size) in the whole study site.

Counting and tracking changes in wildlife populations at the WILD school site is a challenging and valuable activity.

Materials:

Tape measures, graph paper, and a compass.

Procedure:

A transect is simply a path along which information is gathered at sampling points. Small teams of students select or are designated a transect. The length and distance between sampling points can vary. An example would be a transect length of 500 feet with samples every 50 feet within a one square meter area.

Each team then draws a simple map illustration of their transect on graph paper. They highlight the sampling stations so that they may revisit the same station in the future.

Students should collect as much information as possible at each sampling point. Look for any sign of wildlife: tracks, evidence of feeding, droppings, small animals, and vegetation should also be documented.

Establish a sampling schedule for the transects such as once a week or twice a month. The longer the transects are sampled, the more complete and valuable the information collected will be.

After each sampling activity, have the students share and compare their observations. Ask each team to analyze and draw conclusions regarding fluctuations and changes in the data collected.

Extensions:

1) Rather than recording visual observations along the transects, have teams record bird, frog, or insect calls to gain a sampling of audio information. Bird song tapes and frog and toad call tapes are available at many bookstores and will be very helpful in identifying the calls.

2) Another method of gathering data is a quadrat census technique. To demonstrate this technique, select a common wildlife species or plant to be surveyed. Leaf hoppers, ants or perhaps dandelions, depending on the site and time of year are examples.

Select a quadrat size for a sampling plot. One square foot, a square yard or meter will work for this activity.

Choose a sample lawn or field at the school site to be surveyed. To demonstrate this technique choose a fairly homogenous level area 30 to 100 square meters in area. Mark the area off in whole meters, for example 10 m x 10 m.

Create wire squares of an exact dimension (e.g., 1 sq. m.). Use the wire square to randomly select quadrats for exact counts of the selected organism. The validity of this method will be increased by surveying as many quadrants as possible.

The wire squares are tossed randomly into the sample plot. Count the number of the selected organisms each time a quadrat is identified. Average the number of organisms counted each time and multiply by the total number of quadrats in the sample plot for an estimate of the total population.

Project WILD Connection:

The following Project WILD activities provide additional background information and enhance or supplement this activity.

Environmental Barometer
Microtrek Treasure Hunt
Grasshopper Gravity
Wildlife is Everywhere

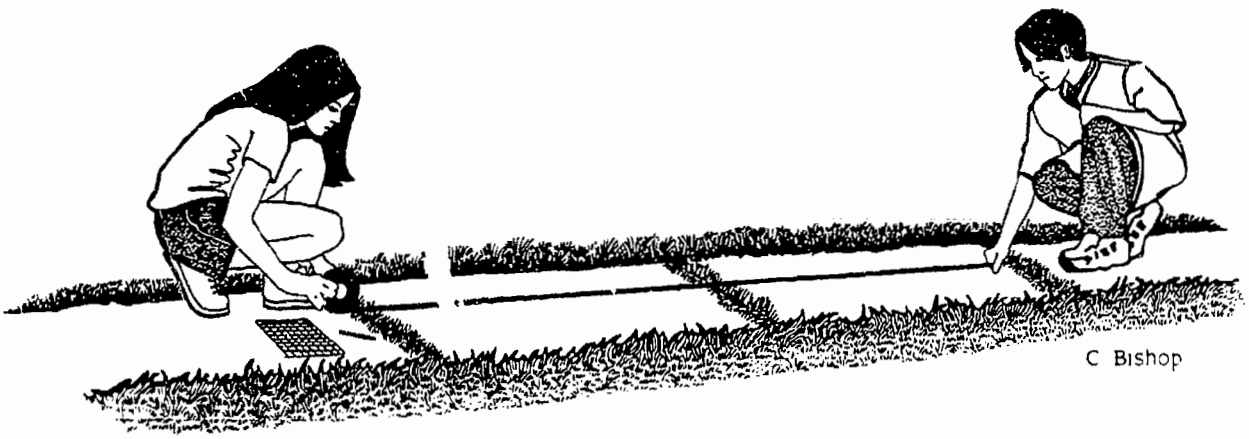

ACTIVITY SIXTEEN

READING THE SCHOOL SITE

Objectives:

Students will be able to: 1) focus and quantify their observation skills, and 2) use critical thinking skills to develop open-ended questions.

Method:

Students consider processes and interrelationships both inside and outside the classroom and then develop questions for others to consider.

Background:

Aldo Leopold referred to "reading the landscape" in reference to making observations and seeing the land as a whole. He asked students to go beyond mere identification and encouraged them to seek out relationships between the land, its inhabitants, and time.

Nature provides many clues to mysteries. A trail of foot-prints, a hollow tree trunk, and broken blades of grass are all clues that can help solve mysteries of the land. The answer may not be immediately obvious, but with keen observation and careful thought, a conclusion can be made, or a story can unfold. Think of a hillside scarred with a trail of low grasses. Could it be wagon wheel tracks, deer trails, or the path of rainwater run-off? In any case, reading the landscape requires analysis. Who was the culprit leaving these tracks? Were they running? Where were they going?

Materials:

Note cards; string or tape; and pencils or pens.

Procedure:

Have the students look about the classroom or whatever indoor setting is used at first. Ask, "What observations can you make that help you: 1) understand the character of the room, 2) identify the interrelationships among its features, and 3) the processes that are occurring, have occurred, or will occur here later?

Students should then, in teams of two or three, develop an open-ended question intended to help others focus on an observation that the team has made. They then record their question on a note card or piece of paper and tape or tie it near an appropriate feature within the room.

Students then mill about the room individually considering each question.

Note: This exercise not only encourages keen observation skills, it teaches the art of asking and answering questions. Questioning often leads to new thoughts and new discussions while opening the mind to things that would otherwise be overlooked. It exercises critical thinking skills because a good question requires fully developed thoughts to achieve the answer or conclusion. Students must hypothesize, based only on clues and observations to develop an answer. A good question is open ended; it can't be answered with a simple "yes" or "no" reply. Keep in mind that it's not always important that the answer is right. What's important is what is learned while trying to answer. Make sure that the person or group who is answering the question has ample time to think about the question and mull over the facts or evidence. Don't rush an answer; allow time for the students to discover the answer for themselves, and perhaps stumble across a new idea.

Now have the students go outside into the school site and along a predetermined trail to repeat the activity. You may wish to designate "stations" ahead of time and assign teams to individual stations.

Students again tape or tie their questions, written on note cards, at each station.

The process of responding to the question in each phase of this activity will depend on the setting and the number of students involved.

Outside, the entire group might reconvene and then proceed along the trail and discuss each question. Or the individual teams could move along the trail to read and discuss questions among themselves.

Extension:

Aldo Leopold, teacher, author, and conservationist, sought to "Teach the student to see the land, to understand what he sees, and to enjoy what he understands." He goes on to explain that he uses the word land rather than wildlife, "...because wildlife cannot be understood without understanding the landscape as a whole." He often referred to "reading the landscape" in reference to observation. He asked students to go beyond identification and to seek out relationships. He asked the students to surmise why or how it became that way, or what did it look like years ago?

Essays from his published work, *A Sand County Almanac*, often refer to "reading the landscape." The following essays can help set the stage for activities that incorporate observation skills: "Home Range," "January Thaw," "Prairie Birthday," and "Come High Water."

Project WILD Connection:

The following Project WILD Activities provide additional background information and enhance or supplement this activity.

Bird Song Survey
Learning to Look, Looking to See
Keeping Score
Urban Nature Search

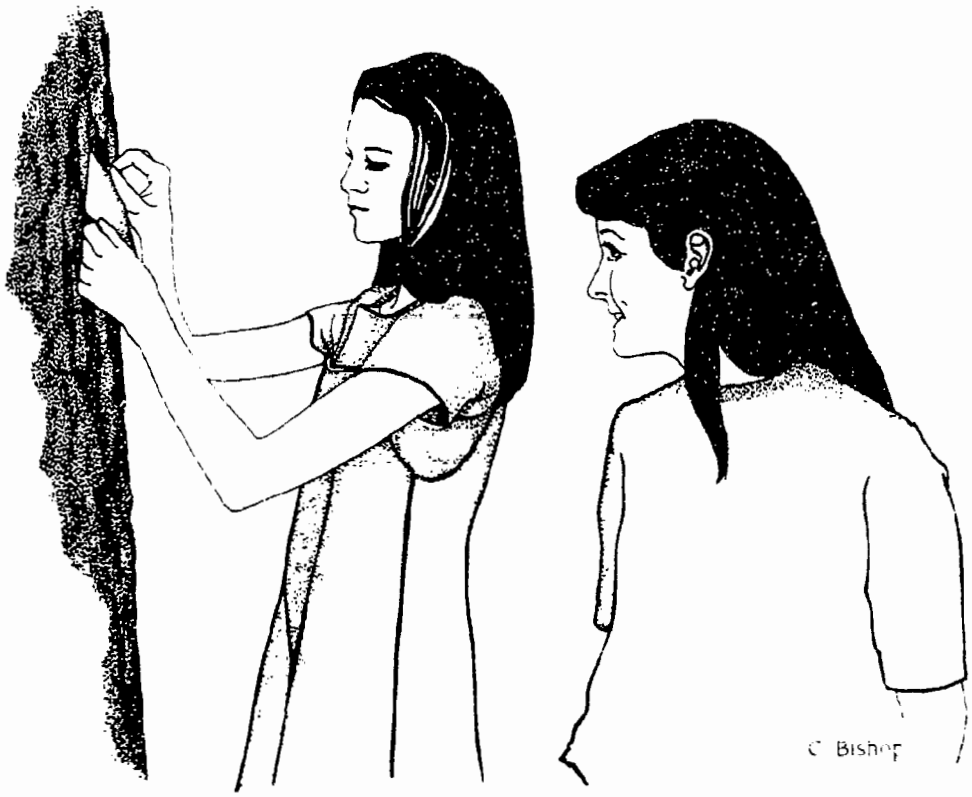

Adapted from "Reading the Landscape", A facilitator training activity of the Leopold Education Project, implemented by Pheasants Forever, St. Paul, MN

ACTIVITY SEVENTEEN

WEB WATCHING

Objectives:

Students will: 1) observe and record spider behavior, and 2) generalize that spiders and other wildlife share the school site.

Method:

Students examine living spiders and explore the school site to locate spider webs and spiders. Students observe and record what they discover.

Background:

Wildlife is everywhere! (Activities 5, 6, 14). Ants, flies, grasshoppers, sowbugs, insects of every kind are all wildlife. And, of course, spiders are too.

Spiders, along with other misunderstood animals like snakes and bats, are often more feared or disliked than other creatures. Perhaps this is because they are so different from mammals which are much easier for us to relate to. Or perhaps it is because of scary stories and superstitions.

C Bishop

One way to overcome the fear of spiders or other "fearsome" creatures is to spend a little time observing them. The more you watch spiders, the more fascinating and less scary they become.

Spiders are important too. They eat damaging insects and play an important role in nature's scheme.

Most of us are familiar with cobwebs. We even find them in our homes. These webs are the spider's way of creating a home for itself and catching food. Many spiders make their own silk and weave it into many different designs. There are funnels, triangles, circles, and the familiar orb webs. An orb web has spokes like a wheel and spiral circles attached to the spokes. Insects that get trapped in the sticky strands of the web alert the spider and become the spider's dinner.

A spider book can help you classify many of the common spiders you find on the school site. Keep accurate notes to enhance your WILD School Site records.

Materials:

Spray bottles (plant mister), sweep net, and glass jars.

Procedure:

Students will be fascinated given the opportunity to examine living spiders. A captive spider, held temporarily in a glass jar can be examined closely and safely.

Spiders can be collected ahead of time from outside the school site or by student volunteers using sweep nets. A spider can be held a day or two without food in a glass jar. Provide a moist cotton ball for a drink and fresh air through small holes in the jar lid. Plan to release the spider as soon as possible to the same area where it was collected. Spiders don't socialize well, so each spider should have its own glass jar. If the spider is a web weaver, it may begin to spin a web on twigs placed in the jar.

Spiders are fragile and the least amount of rough handling could be fatal to a captive

spider. Utmost care is required to ensure the specimen is released in good health.

Observing spiders "in the wild" is an easy and fun activity. But before you can watch and learn more about spiders, you need to go on a spider hunt.

Spiders and webs are everywhere. Look around buildings, bushes, trees, on fences, or anywhere there may be insects to catch. An old field or any area with unmown grass is a great place to look for orb webs.

Once you've located a web, here's a good way to take a closer look. Gently wet the web with a spray mister (a pump squirt bottle set on fine spray.) This will make a nearly invisible web show up just like the morning dew.

An extended search is sure to reveal a spider on or near a web. Use a broom straw to gently explore the web. Are all the threads sticky? How does the spider, if present, respond?

You may wish to observe what happens when an insect falls into a spider's web. If you're exploring good spider habitat, you should be able to observe this naturally.

Small insects captured with a sweep net can be placed into a web with tweezers or fingers. This may require some practice or adult assistance.

As with any observation activity, students should be asked to record their discoveries in a notebook or journal.

Extensions:

1) Many spiders are active at night. Students may want to try to look for webs with a flashlight. A flashlight helps the web show up like a spray mister does during the day. A flashlight might also attract insects which may then become trapped in the web.

2) Spider's eyes are very different from our own. Many have more than just one pair. And many small spiders have eyes that reflect light. Students can locate spiders by their eye shine. If a flashlight is held against the side of your head and slowly swept back and forth across the grass, often tiny specks of reflected light reveal a spider hidden in the grass. By keeping the beam of light on the source, you may be able to find the spider.

Safety Note: Very few spiders are known to bite humans. And while nearly all spiders are venomous, few are dangerously poisonous. The black widow and brown recluse, while uncommon in much of Ohio, should be recognized and avoided. A reasonable amount of care should ensure a safe and hazard-free activity for both students and spiders.

Project WILD Connection:

The following Project WILD Activities provide additional background information and enhance or supplement this activity.

First Impressions
Spider Web Geometry
Interview a Spider

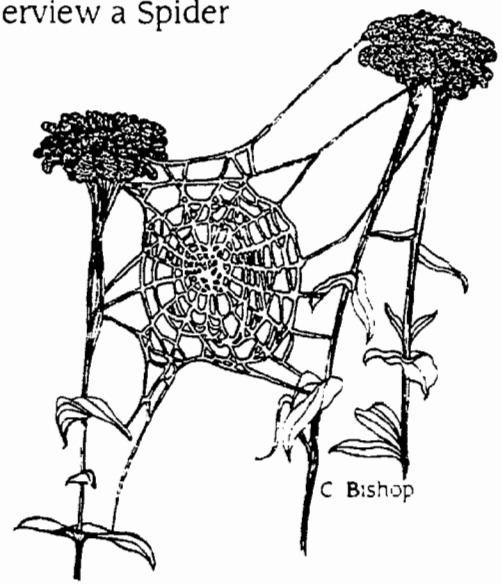

ACTIVITY EIGHTEEN

WATER WONDERS

Objectives:

Students will 1) quantify and qualify water and moisture on the school site, and 2) observe the relationship between water and aquatic life.

Method:

Students will take a physical inventory of water and moisture on the school site using a variety of observation and measuring techniques. A study of water quality and aquatic organisms is introduced.

Background:

The inclusion of water and water studies on the WILD School Site can take many forms. While some school sites are lucky enough to have a pond or a stream, all school sites experience rain, puddles, rain water run-off, water fountains and lawn sprinklers, damp earth and moist air, and even seasonal wetlands.

Just as there is water, in some form, on or within walking distance of every school site, there are water activities that can be accomplished just outside any school building door.

Water activities can include an exploration of the physical and chemical properties of water, the water cycle and its role in the ecosystem of the school site, the physical impact of water on wildlife habitat, the relationship between aquatic organisms and water quantity and quality, and much more.

Materials:

Containers for soil samples, such as empty cans; glass drinking glasses; ice water. Litmus paper; water testing kits (optional).

Procedure:

Water or moisture can be measured in several ways. Simply identifying the wettest and driest places on the school site adds to your data and can be useful as you plan other activities and projects.

There are natural and created features that influence rainwater run-off. Water puddles and the path of any run-off after a rain can be mapped and measured. Site features that influence water retention and run-off can be noted.

How does water retention influence the plants and animals, and animal behavior on the school site?

Other water factors to measure that influence the school site habitat include soil moisture. Collect and weigh a cup of soil from several locations on the school site. Dry it thoroughly in a slow oven or other warm place, then weigh the sample a second time. Note the weight loss. This indicates the amount of water that has evaporated from the soil. Which soil samples contained the most moisture? Can you visually classify the different soils collected?

Moisture in the air can be measured also. There may be differences in air moisture at different locations on the school site. Fill glasses with ice water and watch how wa-

ter from the air condenses into a fog on the outside of the glass. Does this happen more quickly at different locations? On different days?

The chemical and physical properties of water can also be measured. Water collected from puddles, seasonal pools, ditches, and even tap water can be compared for acidity, turbidity, dissolved oxygen, and more. Litmus paper, water testing kits, or simple observations can contribute to a study of water quality.

Freshwater areas abound with life. A pond or stream study is well worth considering. There are many activity guides available that include suggestions for water study activities.

Water life study, however, does not necessarily require a pond or stream. A temporary pond or garden pool (Activity 9, Project 12) will soon be colonized by all kinds of macro and micro organisms. Aquatic invertebrates such as dragonfly and mosquito larvae will soon take advantage of the aquatic habitat.

C. Bishop

Water quality studies can be related to the number and kinds of plants and animals that invade the pool.

Any semi-permanent water, or a wet spot in a field, a ditch or some created water retention spot can be examined for the life it supports.

A survey and inventory of all the aquatic plants and animals at the WILD School Site will generate unlimited project and activity possibilities.

Project WILD Connection:

The following Project WILD Activities provide additional background information, and enhance or supplement this activity.

I'm Thirsty
Pond Succession
No Water Off a Duck's Back
Rainfall and the Forest

In addition to the above, these activities from *Aquatic Project WILD* are a particularly good source to supplement water studies:

Are You Me?
Water Canaries
How Wet is Our Planet?
Watershed
Micro Odyssey
Wetland Metaphors
Puddle Wonders
Where Does Water Run Off After School?
The Glass Menagerie

ACTIVITY NINETEEN

FOLLOWING THE SEASONS

Objectives:

Students will: 1) observe and describe their natural surroundings on the school site, 2) record their observations, and 3) identify seasonal changes that occur in their surroundings.

Method:

Students go outside to write about and draw their observations, and record their perceptions in journals.

Background:

Seasonal changes offer limitless possibilities for students to record both data and personal observations. Student journals can then provide factual accounts of the school site as the seasons change. Journals can also be a place for students to personally interpret and reflect on their perceptions and to connect with the natural world and their school community.

Materials:

Any "blank" books, either purchased or created, writing and drawing supplies, examples of published journals by authors such as Aldo Leopold, Henry David Thoreau, Walt Whitman, and others, or essays from the Ohio Division of Wildlife's *Wild Ohio* magazine.

Procedure:

Students can construct simple journals by folding white paper in half and stapling a folded construction paper cover to the outside. Small ring binders with blank notebook paper make good journals too.

Prepare your students to go outside; they will need a pencil, their journal, and perhaps a square of carpet or a plastic bag to sit on. Read them an excerpt from a journal or an essay and discuss its relevance to the present, and for them as beginning journal writers.

Take the students outside. Tell them to list as many observations as they can that are unique to the season or that mean a new season is coming. Ask them to use all five senses as they make observations. Let them wander for 10 minutes to make and record their observations.

In the remaining time they should sketch one of their observations as they think about its significance. It helps beginning sketch artists to focus on something small: a leaf, an acorn, or an abandoned bird nest, for example.

Before heading in, ask the writers to share their observations.

Look for those observations which are most often recorded and those that are unique. Look for ideas and themes that would be great to explore in-depth. Students should be provided enough time to reflect and write about their sketch...how it is important, what great truth or beauty they have discovered, and how it is connected to their own lives. Students may wish to record the date and location of each entry.

Repeat the activity as soon as possible so that students will "bond" with their journal. Once a dozen or so pages have been filled, the journal writers begin to feel an obligation to return to it on their own.

Journal Tips

* Allow students to use the back of their journal for note-keeping, assignments, etc. By working from back to front as well as front to back, the journals fill up faster giving writers a sense of accomplishment. This also gives students a reason for keeping their journals with them all the time.

* Give writers a theme to help them focus. Search for patterns that repeat them-

selves, make comparisons, look for things out of step with the season, or evidence of seasons past or yet to come.

* Choose one plant or a fallen log and follow it through a season.

* Develop task cards that will act as a "jump-start" for reluctant writers.

* Tracking the dates of natural events is called "phenology" and is a great journal project. The first frost, snowfall, or blooming dandelion are a few of the possibilities that can be dated and detailed.

* Make time to share entries. Discuss the observations and ideas. Look for deeper meaning and understanding within and between the lines or in the sketches of journal entries.

* Try exchanging journals every two weeks with another writer in class or even another in class or even another state!

Once maintaining a journal becomes a regular part of a WILD School Site program, students will often suggest a new area where making journal entries will be useful.

The impact of seasonal changes on the natural and physical aspects of the school site, recorded in journals, can be a powerful experience. A journal can be used to integrate the school site activities into a comprehensive conservation and science education program.

Project WILD Connection:

The following Project WILD Activities provide additional background information and enhance or supplement this activity.

Animal Poetry
Drawing on Nature
Wild Words, A Journal-Making Activity

ACTIVITY TWENTY

DECAY RELAY

Objectives:

Students will be able to: 1) describe the role of decomposers in an ecosystem, and 2) identify and classify various decomposers on the school site.

Method:

Students create a decaying log situation and observe the process and organisms of decomposition.

Background:

Have you ever wondered what happens to all the billions of leaves that fall to the ground each year? They always seem to be gone by the following autumn, leaving room for the new crop of leaf material. Fungi and bacteria are partially responsible, causing the decomposition of leaves as well as wood, fruits and vegetables, the mildew of paint and clothing, and the spoilage of meats. These seemingly destructive organisms play an important role in nature. When plants and animals die, they would never decay if not for fungi and bacteria that break down organic compounds and return them to air and soil.

Assisting with the decaying process are sowbugs, pillbugs, termites, carpenter ants, wood roaches, and bark beetles that eat or tunnel through wood and plant material such as dead leaves. Some animals, such as centipedes and spiders feed on the sowbugs and other scavengers that feed on the decaying material. These predators then become meals for birds, skunks, and other animals that tear into a log to find food.

Materials:

Wood logs (3-4 feet long), fallen leaves, and decomposers (algae, fungi and insects) collected from decaying leaves or logs.

Procedure:

With a little effort you should be able to find decomposing sticks, logs or leaves on almost any school site. A rotten log (Project 5) can be brought in, if necessary, for this and other activities.

Students first should study decomposition found on the school site. Examine leaves or a rotten log. What sort of changes are taking place? What will eventually happen if this process continues?

Carefully sift through leaf litter or roll the log over to expose the underside. Look for evidence of decomposers: fungus, mold, slugs, wood-eating insects, and insect eggs. You may even find a narrow tunnel or a hole where a small mammal or bird has contributed to the process.

Students then, in teams, place their own log somewhere on the school site where they

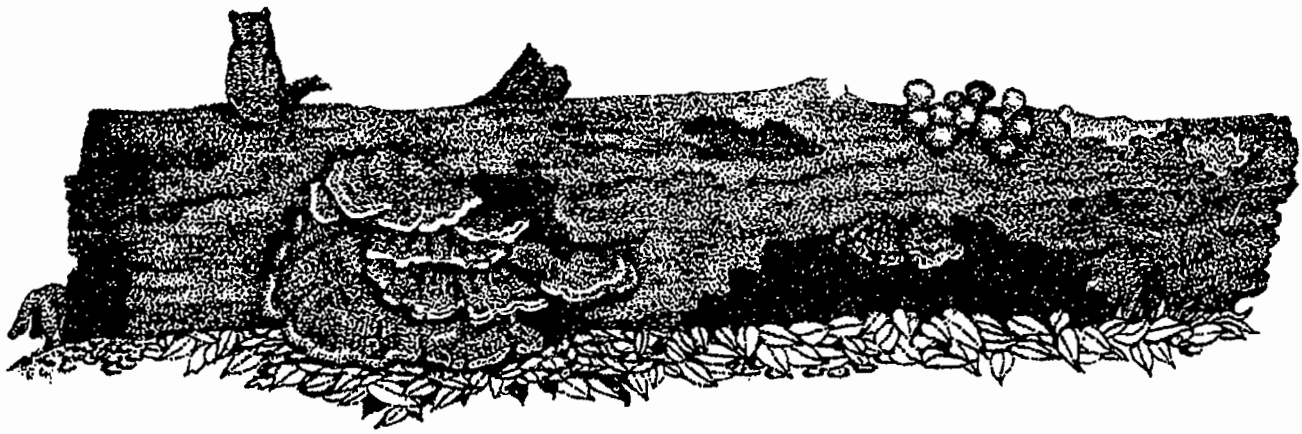

think it might decay the quickest. What options are there for moisture, warmth, sunlight?

Students may add collected materials, soil, leaves, even insects they think might contribute to decomposition.

Students should periodically compare and record their results.

Extensions:

1. The above activity can be brought into the classroom. Smaller logs, small enough to fit into an old aquarium, are moistened and the aquarium is covered. Often fungi will soon appear from spores that were likely already on the log.

2. A compost pile, where soft vegetable matter like leaves, grass clippings, and food scraps decay into soil is a good school site project and can provide rich humus for planting projects. Garden store staff and libraries can be sources of information to help you create a compost pile.

Project WILD Connection:

The following Project WILD Activity provides additional background information and enhances or supplements this activity.

Eco Enrichers

APPENDICES

REALITY CHECK

Poison ivy, bee stings, cuts and bruises, and even communicable diseases are hazards associated with being out-of-doors and in contact with wildlife.

Some educators see these hazards as insurmountable obstacles, others as minor distractions that require a common sense approach to teaching outdoors.

A list of all the cautions to be considered and all the ways to avoid possible hazards would be lengthy. There is always an associated risk with any venture that includes physical activity in diverse settings, particularly out-of-doors. As with any endeavor, proper planning and common sense can help avert problems.

Wild animals from bats to spiders should not be handled or approached too closely. In addition to the possibility of being bitten or scratched, unnecessary handling could injure the animal.

If you have questions about wild animal diseases or dangers, contact resource professionals for help.

Wild animals are sometimes viewed as a nuisance by farmers and home owners. Property damage, crop loss, sanitation, and competition for space are concerns to be aware of.

Wild animals such as skunks, raccoons, starlings, and even squirrels and deer can sometimes reach nuisance proportions. Rats and mice could be attracted to projects designed to host more desirable visitors. The WILD School Site stewards need to be prepared to deal realistically with animal "problems" and even adjust their site management plan when necessary to reduce conflict.

Planning, implementing, utilizing, and sustaining a WILD School Site is hard work. Two simple rules that may prevent the project from becoming a problem are: start small and get help.

There are good resources available to help WILD School Site leaders and learners create a reasonable, sensible, and responsible outdoor classroom, one that will not only contribute to learning and understanding, but one that will contribute to the school as a community, and make school a better place to be.

"Creating an outdoor classroom may not actually lessen teachers' workloads, but it changes the nature of the work by taking the pain out and putting the joy and excitement of learning back in."

Ann Coffey
Transforming School Grounds;
Green Teacher

REFERENCES

Burke, K. (Ed.) (1983). How to Attract Birds. San Francisco: Ortho Books.

Caduto, Michael J., and Joseph Bruchac. (1991). Keepers of the Animals: Native American Stories and Environmental Activities for Children. Golden, co.:Fulcrum Publishing.

Cantrell, D.C., & Barron, P.A. (Eds.) (1994). Integrating Environmental Education and Science. Newark, OH:Environmental Education Council of Ohio.

Carman, Sam (Ed.) (1992). Guidelines and Features for Outdoor Classrooms. Indianapolis:Indiana Department of Natural Resources.

Cornell, Joseph Bharat. (1979). Sharing Nature with Children. Nevada City, CA:Aranda Publications.

Cox, Jeff. Landscaping with Nature. (1992). Pennsylvania:Rodale Press.

Cronin-Jones, Linda. (1992). The Schoolyard Wildlife Activity Guide. Tallahassee, FL: Florida Game and Fresh Water Fish Commission.

Dennis, John V. The Wildlife Gardener. (1985). New York:Alfred A. Knoph.

Fluegelman, A. (Ed.) (1976). The New Games Book. Garden City, NY:Dolphin Books.

Gerston, R. (1983). Just Open the Door: A Complete Guide to Experiencing Environmental Education. (2nd ed.). Danville, IL:The Interstate Printers & Publishers, Inc.

Hammerman, Donald R., and Wm. M. Hammerman. (1964). Teaching In The Outdoors. Minneapolis:Burgess Publishing Company.

Harlow, R., & Morgan, G. (1991). 175 Amazing Nature Experiments. New York:Random House.

Harrison, George H. (1979). The Backyard Bird Watcher. New York:Simon and Schuster.

Henderson, Carrol L. (1992). Woodworking for Wildlife. Minnesota Department of Natural Resources.

Kress, Stephen W. (1985). The Audubon Society Guide to Attracting Birds. New York:Charles Scibner's Sons.

Land Use Council 16. (1992). Leopold Education Program. St. Paul, MN:Pheasants Forever, Inc.

Lingelbach, Jenepher. (1986). Hands-on Nature, information and Activities for Exploring the Environment with Children. Woodstock, Vt:Vermont Institute of Natural Science.

McCormack, A.J. (1979). Outdoor Areas as Learning Laboratories: CESI Sourcebook. Columbus, OH:ERIC Clearinghouse for Science, Mathematics and Environmental Education.

Merilees, Bill. (1989). Attracting Backyard Wildlife. Stillwater, Minnesota:Voyageur Press.

Nabham, Garu P. and Trimble, Stephen. (1994). The Geography of Childhood - Why Children Need Wild Places. Boston:Beacon Press.

National Wildlife Federation. (1986). Gardening with Wildlife. Washington D.C.

Roth, C.E., Cervoni, C., Wellnitz, T., Arms, E. (1988). Beyond the Classroom: Exploration of Schoolground & Backyard. Lincoln, MA:The Massachusetts Audubon Society.

Russell, H.R. (1990). Ten Minute Field Trips. (2nd ed.). Washington D.C.:National Science Teachers Association.

Schiff, P., & Smith-Walters, C. (1993). Wild School Sites: A Guide to Preparing for Habitat Improvement Projects on School Grounds. Houston, TX:Council for Environmental Education, Inc.

Sisson, Edith A. (1982). Nature With Children of All Ages Activities & Adventures for Exploring, Learning, & Enjoying the World Around Us. New York:Prentice-Hall Press.

Slattery, B.D. (1991). Wow!: The Wonders of Wetlands, an Educator's Guide. St. Michael, MD: Environmental Concern, Inc.

Sobel, David. (1993). Children's Special Places - Exploring the Role of Forts, Dens, and Bush Houses in Middle Childhood. Tucson, AZ:Zephyr Press.

Stokes, Donald and Lillian. (1989). The Hummingbird Book. Boston:Little Brown and Company.

Swan, M.D. (1970). Tips and Tricks in Outdoor Education. Danville, IL:The Interstate Printers and Publishers, Inc.

Tekulsky, Mathew. (1990). The Butterfly Garden. Boston:The Harvard Common Press.

Tuttle, Merlin. (1988). America's Neighborhood Bats. Austin:University of Texas.

Weston, Shann. (1992). Naturescaping-A Place for Wildlife. Portland, OR:Oregon Department of Fish and Wildlife.

Wild Hare Media. (1991). Wild in the City. (Video) Portland, Oregon.

Wyzga, Marilyn C. (1994). Homes for Wildlife: A Planning Guide for Habitat Enhancement on School Grounds. Concord, NH:New Hampshire Fish & Game Department.

Division of Wildlife
Ohio Department of Natural Resources

OHIO WILD SCHOOL SITE APPLICATION FOR CERTIFICATION

The Ohio Division of Wildlife's WILD School Site Certificate is awarded to schools in recognition of the efforts of teachers, students and the school community to benefit wildlife through projects accomplished on the school grounds.

Wildlife habitat improvement projects that occur at the school site can provide valuable educational experiences. These projects help students recognize the needs and values of wildlife and ecosystems and demonstrate ecological function. Wildlife habitat improvement projects may also provide for the needs of wildlife in urban and suburban settings where building and development infringe on natural areas.

Wildlife habitat improvement projects provide a place for students to apply learned concepts and take informed, responsible action that benefits wildlife and the school community.

By completing this application and becoming a Certified WILD School Site, you will commit to a sustainable environmental education program that uses the school grounds as an outdoor classroom. It also signifies your commitment to maintain a place for wildlife within that program.

School Name _____ Date _____

Your Name _____ Affiliation or Position _____

Street Address, City, Zip _____

County _____ Telephone _____ FAX _____

1. Describe your project(s). Include the goal(s) and objectives and describe the results of your project(s). You may include some photos or drawings:

_____

_____

_____

2. Identify some of the ways you have provided habitat for wildlife within your project(s):

A. Food: _____

_____

Wildlife that benefits: _____

_____

B. Water: _____

_____

Wildlife that benefits: _____

_____

C. Shelter: _____

_____

Wildlife that benefits: _____

_____

D. Space: _____

_____

Wildlife that benefits. _____

_____

E. Arrangement - enclose a diagram or map of the school grounds to illustrate habitat components as they are arranged for your project(s).

3. Program Development - Explain how your school site project(s) fit within your instructional program. (You may enclose copies of lessons.)

A. Explain your curriculum connections: _____

_____

_____

B. List Project WILD or other activities used with your project(s): _____

_____

_____

4. Project Value - Briefly describe the value of your project to wildlife and the school community: _____

_____

_____

Return completed application with attachments to:

Division of Wildlife
Education Section
1840 Belcher Drive
Columbus, Ohio 43224-1329

Administrative Use:

Inspected _____ A. _____

Approved _____ Date _____ B. _____

Number _____ C. _____

Presented _____

BAT HOUSE

Do Something Wild!

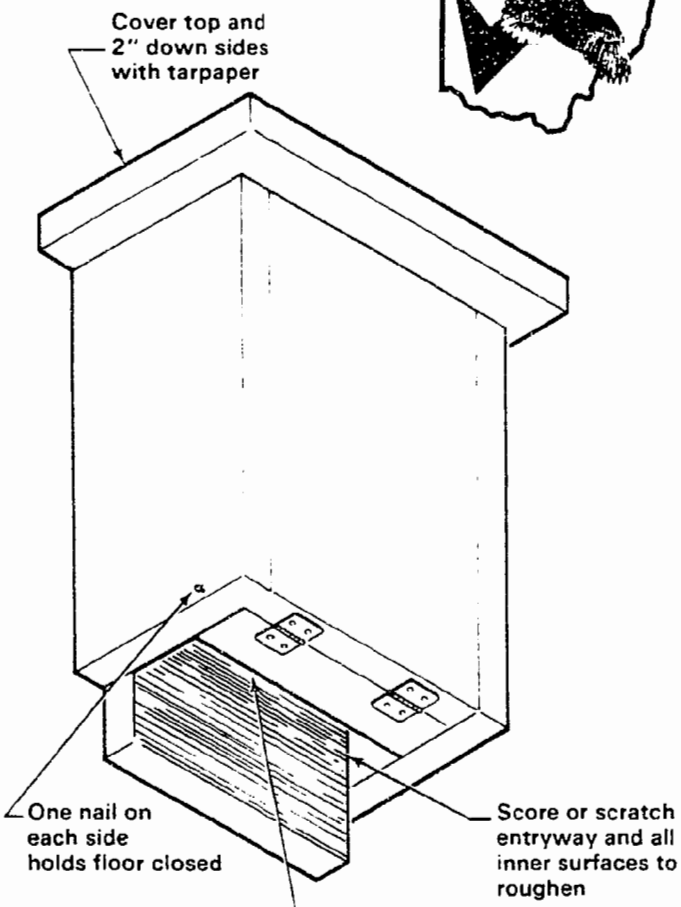

Bat houses should be fastened securely to a tree trunk or the side of a building, 12 to 15 feet above ground. They should be on the east side of the house or tree where they will receive sun during the morning and be shaded during the afternoon. Sites protected from the wind and near rivers, lakes, bogs, or marshes where insect populations are high will increase the likelihood of use. Bat houses should be put up before April.

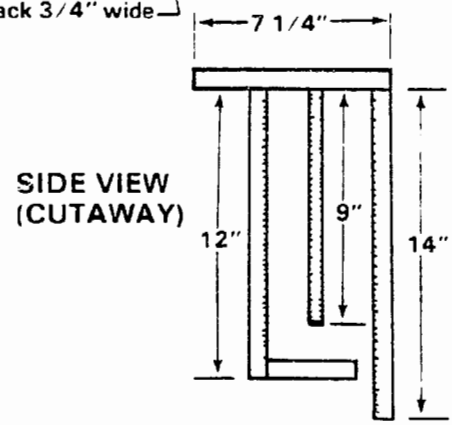

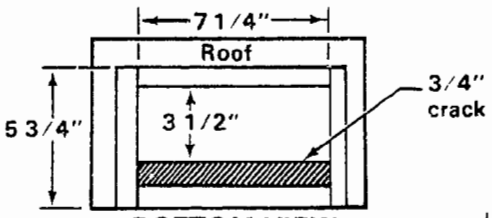

BOTTOM VIEW

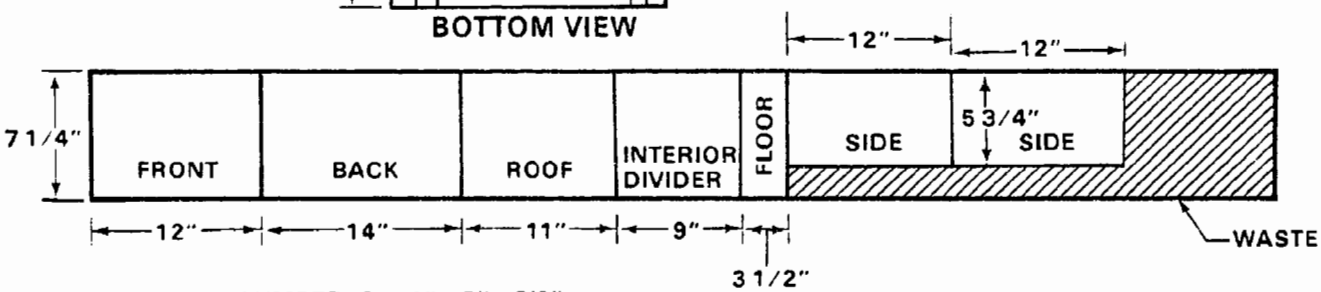

LUMBER: One 1" x 8" x 8'0"

AMERICAN KESTREL, EASTERN SCREECH-OWL NEST BOX

Do Something Wild!

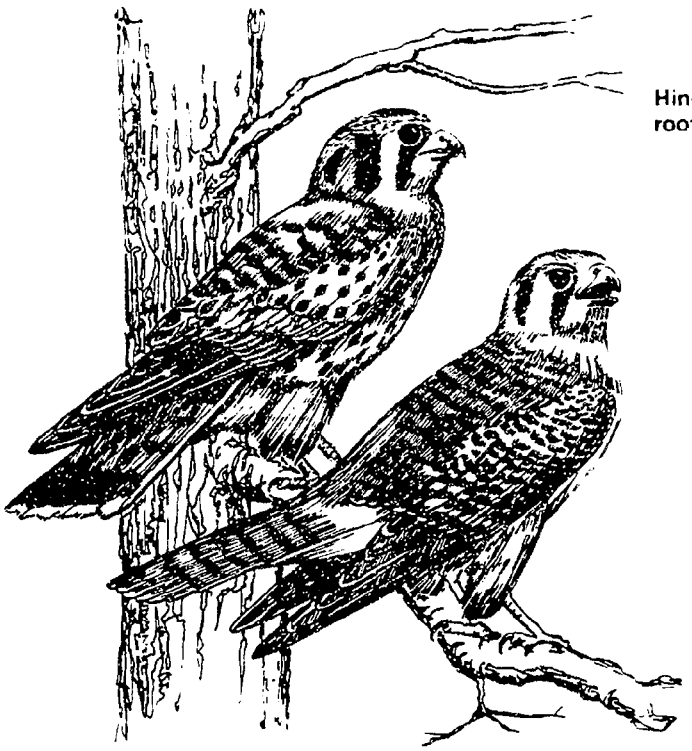

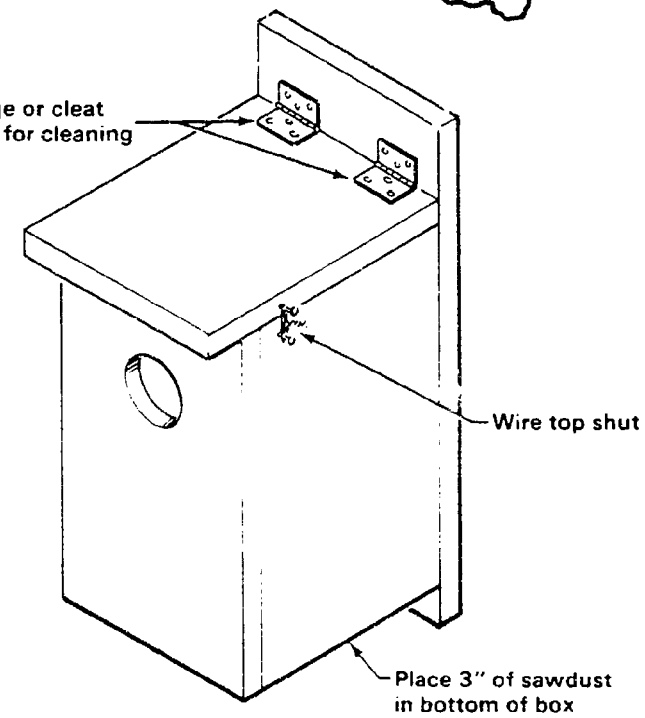

Preferred habitat for owls includes mixed stands of deciduous forest on the edge of woods adjacent to fields or wetlands. Kestrels prefer more open country. To prevent use by squirrels, the box for owls can be placed on a pole with a predator guard. Boxes should be placed at least 10 feet high for owls, and 10 to 30 feet high for kestrels.

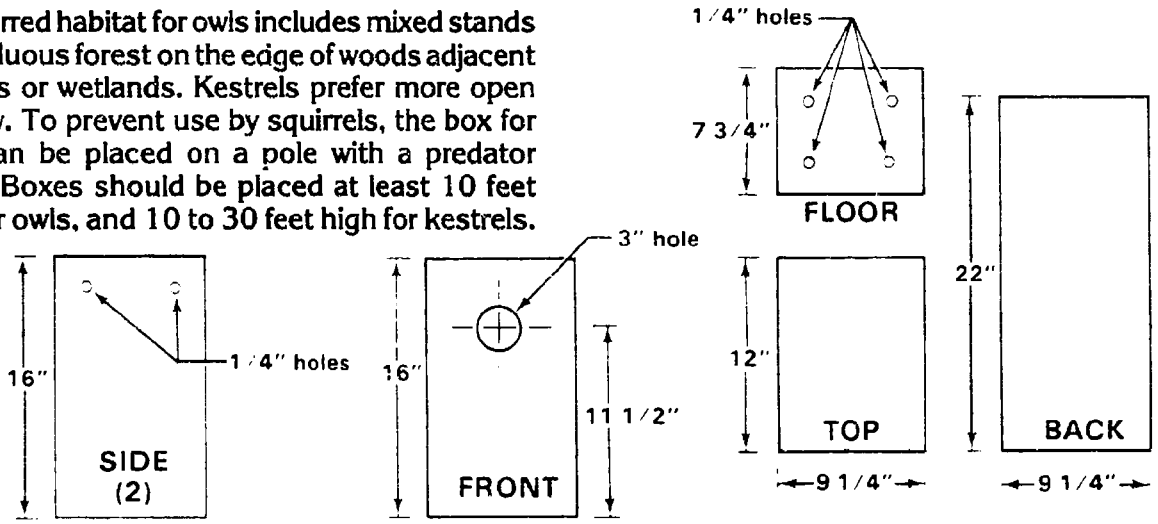

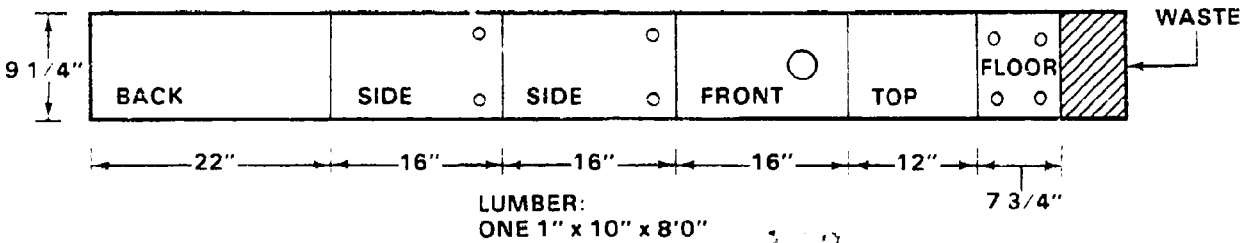

LUMBER:
ONE 1" x 10" x 8'0"

EASTERN BLUEBIRD, TREE SWALLOW NEST BOX

Do Something Wild!

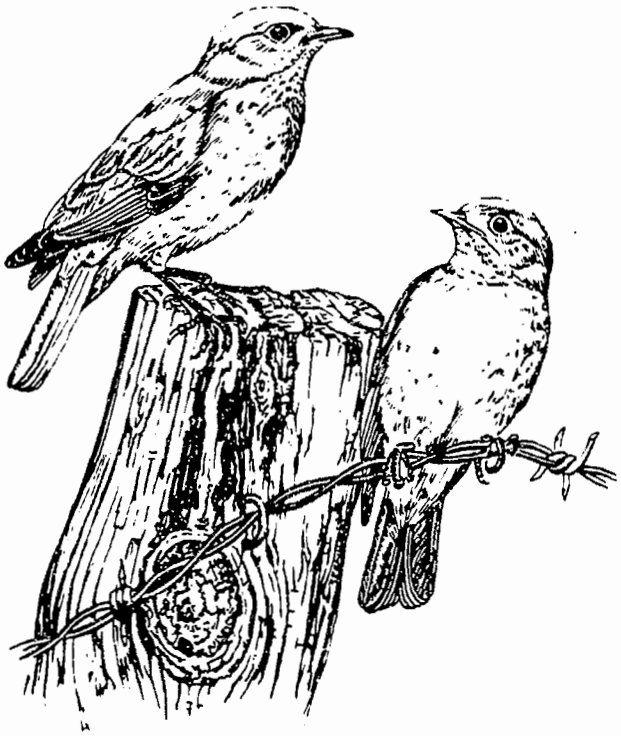

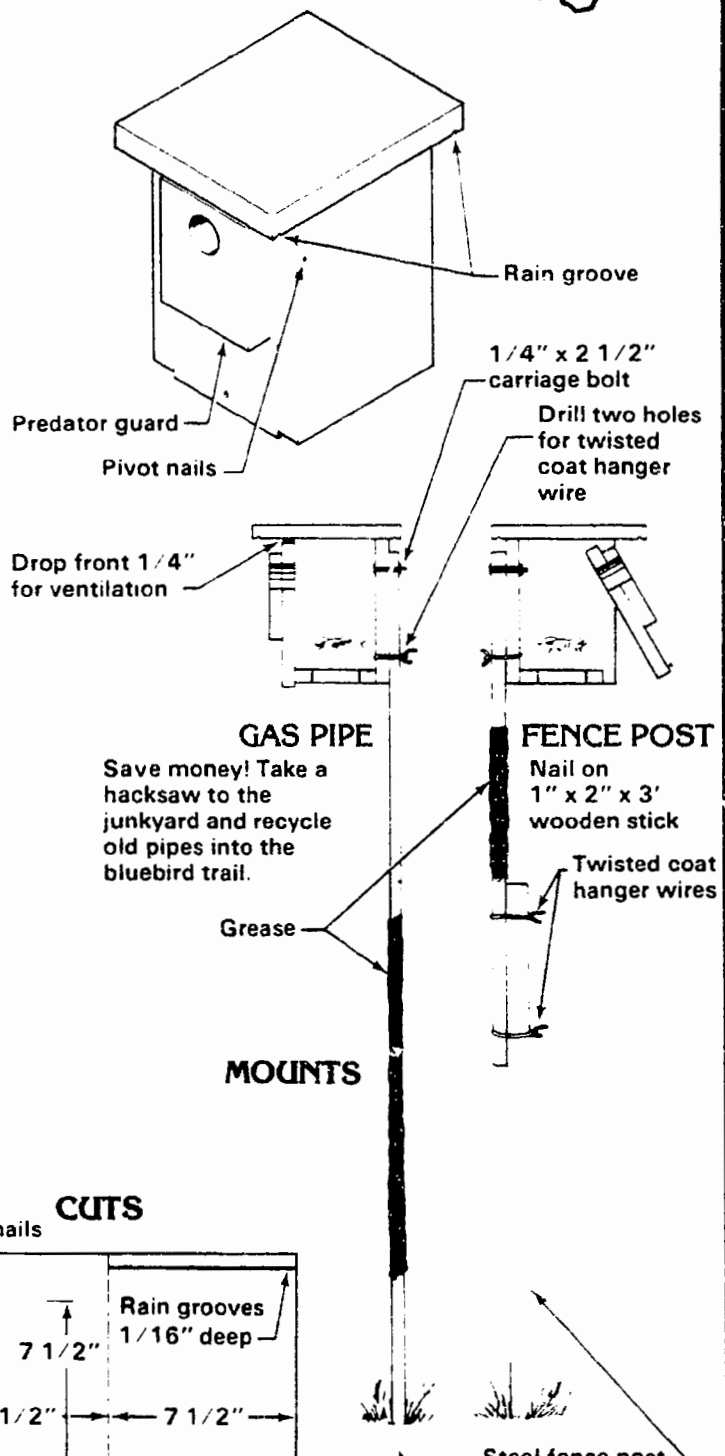

Ideal bluebird habitat is mixed hardwood forest and grasslands. The grassy areas may be meadows, pastures, yards, cemeteries, highway rights-of-way, or prairies. The most desirable grass for bluebirds and tree swallows is short or sparse, mowed or grazed. The area must also provide enough feeding perches. These can be power lines, fence posts, or scattered trees. Boxes should be mounted on posts, about five feet above ground.

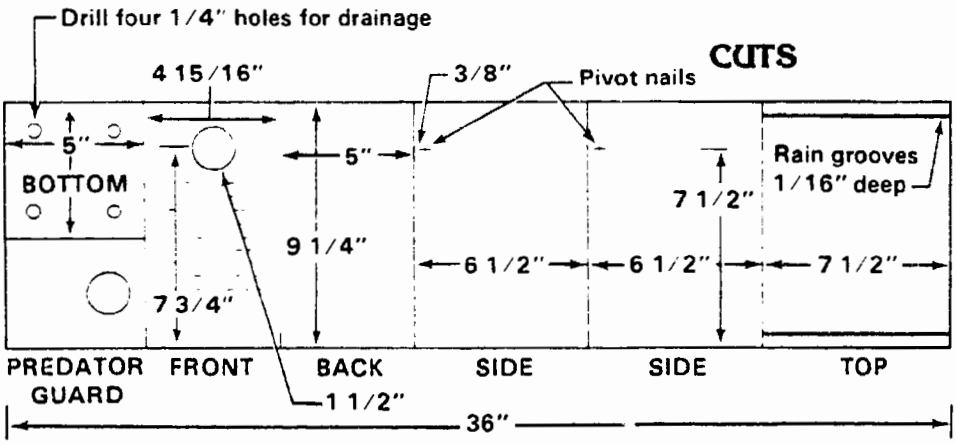

GRAY AND FOX SQUIRREL NEST BOX

Do Something Wild!

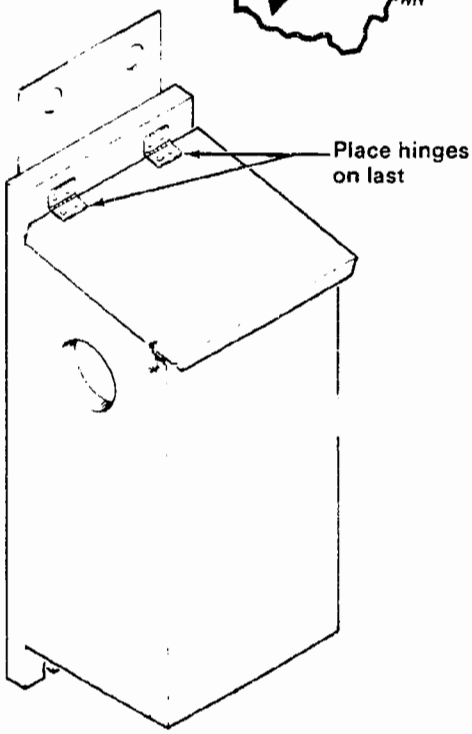

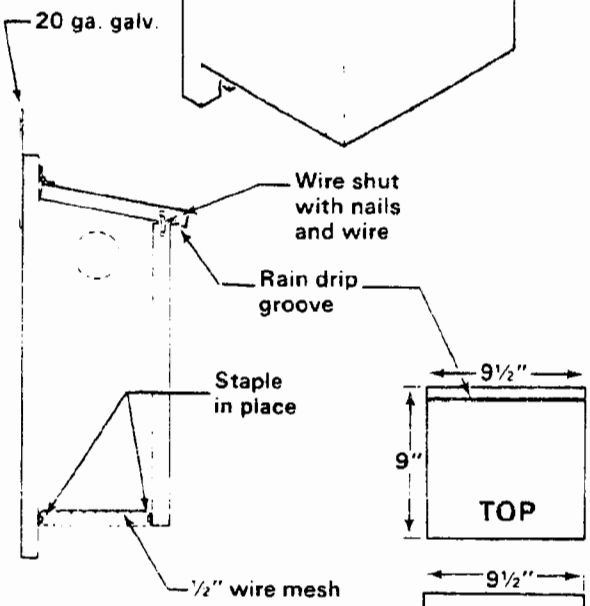

The squirrel house should be placed at least 30 feet above ground in a tree at least 10 inches in diameter. The entrance hole should face either east or south, away from prevailing winter winds. The box can be made more enticing to squirrels by half-filling it with dry leaves. Attach the box to the tree with two lag screws and washers, and loosen the screws each year to allow for tree growth. Boxes should be set out in the fall, since the heaviest use is in winter. One or two boxes per acre will maintain a maximum squirrel population.

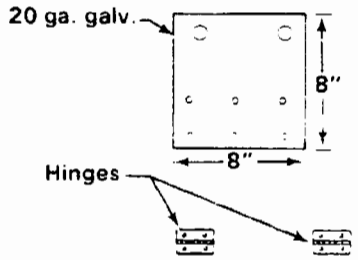

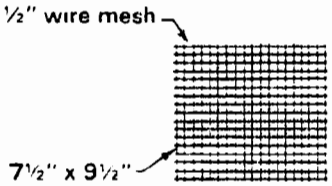

FLOOR

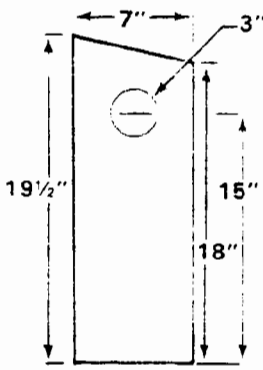

FRONT

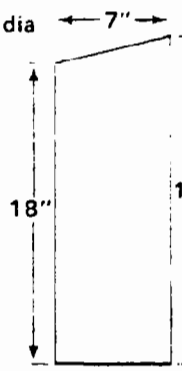

BACK

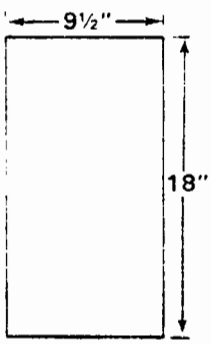

SIDE

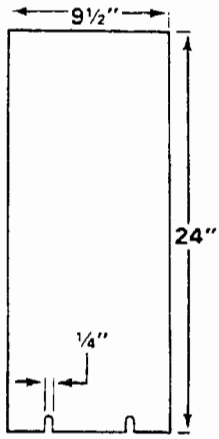

MOUNT BOARD

Division of Wildlife
Ohio Department of Natural Resources

Wildlife Habitat Planting Stock Sources

Native plants generally are better adapted to local environmental conditions and have ecological safeguards which keep them from spreading and displacing other native plants. Moreover, long-term survival is often better with native plants than with non-native. Small, bare-rooted stock is best for larger plantings. For backyard plantings, larger stock may be used; it will provide wildlife food and cover sooner.

Nursery Name and Address	Native Trees and Shrubs Available:													
	Evergreens	Oak	Black walnut	Hickories	Serviceberry	Raspberry & blackberry	Sumac	Crabapple	Sweet gum	Green ash	Sycamore	Common alder	Dogwoods	Elderberry
Cold Stream Farm 2030 Free Soil Rd. Free Soil, MI 49411-9752 (616/464-5809)	●				●		●	●		●			●	
Evergreen Nursery Co., Inc. 5027 County II Strugeon Bay, WI 54235 (800/448-5691)	●												●	
Flickers' Nursery Sagamore, PA 16250 (412/783-6528)	●	●	●		●		●	●		●			●	●
Mellinger's Nursery 2310 W. South Range Rd. North Lima, OH 44452-9731 (800/321-7444)	●	●	●	●		●	●	●	●	●	●	●	●	●
Musser Forest, Inc. Dept. S-92M P.O. Box 340 Indiana, PA 15701-0340 (412/465-5685)	●	●	●		●		●	●	●	●		●	●	●
Ohio Dept. of Natural Resources Division of Forestry 1855 Fountain Sq. Court Columbus, OH 43224 (614/265-6694)	●	●	●		●			●	●	●	●			

(Hazelnut)

(Common alder)

(Am. beech)

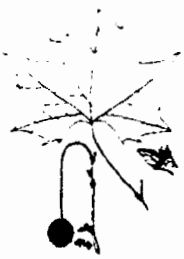
(Sycamore)

This publication is for informational purposes only, and does not represent a complete list. No recommendation or sponsorship is made or implied.

Nursery Name and Address	Native Grasses, Wildflowers, and Aquatic Plants Available:												
	Big bluestem	Indian grass	Switchgrass	Little bluestem	Sideoats gramma	Cordgrass	Wet prairie wildflowers	Mesic prairie wildflowers	Dry prairie wildflowers	Aquatic plants*	Emergent aquatic plants	Seeds available	Plants available
Bluestem Seed Co. 4045 Summerset Rd. Prairie Village, KS 66208 (816/786-2401)	●	●	●	●	●							●	
LaFayette Home Nursery, Inc. Rural Route 1, Box 1A LaFayette, Il 61449 (309/995-3311)							●	●	●	●	●	●	
Kester's Wild Game Food Nurseries, Inc. P.O. Box 516 Omro, WI 54963 (800/558-8815)	●		●	●		●				●	●	●	●
Osenbaugh Grass Seeds R.R. 1, Box 106 Lucas, IA 50151 (515/766-6476)	●	●	●	●	●			●				●	
Prairie Moon Nursery Rt. 3, Box 163 Winona, MN 55987 (507/452-1362)	●	●	●	●	●	●	●	●	●		●	●	
Prairie Ridge Nursery R.R. 2, 9738 Overland Rd. Mt. Horeb, WI 53572-2832 (608/437-5245)	●	●	●	●	●	●	●	●	●		●	●	●
Prairie Seed Source P.O. Box 83 North Lake, WI 53064-0083	●	●	●	●	●	●	●	●	●			●	
Sharp Brothers Seed Co. Box 140 Healy, KS 67850 (800-4-NATIVE)	●	●	●	●	●			●					●
Wildlife Nurseries, Inc. P.O. Box 2724 Oshkosh, WI 54903 (414/231-3780)	●	●	●	●						●	●	●	●

(Big bluestem)

(Purple coneflower)

(Common arrowhead)

* Submerged and floating

Division of Wildlife
Ohio Department of Natural Resources

Equal Opportunity

The Ohio Division of Wildlife offers equal opportunity regardless of race, color, national origin, sex, age, disability, or religious belief. Persons who believe they have been discriminated against in any program, activity, or facility should contact: The Office for Human Resources, U.S. Fish and Wildlife Service, Department of the Interior, Washington, D.C. 20240; or Department of Natural Resources, EEO Office, 1930 Belcher Drive, Columbus, Ohio 43224

George V. Voinovich, Governor •Donald C. Anderson, Director
Michael J. Budzik, Chief